This is a digital copy of a book that was preserved for generations on library shelves before it was carefully scanned by Google as part of a project to make the world's books discoverable online.

It has survived long enough for the copyright to expire and the book to enter the public domain. A public domain book is one that was never subject to copyright or whose legal copyright term has expired. Whether a book is in the public domain may vary country to country. Public domain books are our gateways to the past, representing a wealth of history, culture and knowledge that's often difficult to discover.

Marks, notations and other marginalia present in the original volume will appear in this file - a reminder of this book's long journey from the publisher to a library and finally to you.

Usage guidelines

Google is proud to partner with libraries to digitize public domain materials and make them widely accessible. Public domain books belong to the public and we are merely their custodians. Nevertheless, this work is expensive, so in order to keep providing this resource, we have taken steps to prevent abuse by commercial parties, including placing technical restrictions on automated querying.

We also ask that you:

+ *Make non-commercial use of the files* We designed Google Book Search for use by individuals, and we request that you use these files for personal, non-commercial purposes.
+ *Refrain from automated querying* Do not send automated queries of any sort to Google's system: If you are conducting research on machine translation, optical character recognition or other areas where access to a large amount of text is helpful, please contact us. We encourage the use of public domain materials for these purposes and may be able to help.
+ *Maintain attribution* The Google "watermark" you see on each file is essential for informing people about this project and helping them find additional materials through Google Book Search. Please do not remove it.
+ *Keep it legal* Whatever your use, remember that you are responsible for ensuring that what you are doing is legal. Do not assume that just because we believe a book is in the public domain for users in the United States, that the work is also in the public domain for users in other countries. Whether a book is still in copyright varies from country to country, and we can't offer guidance on whether any specific use of any specific book is allowed. Please do not assume that a book's appearance in Google Book Search means it can be used in any manner anywhere in the world. Copyright infringement liability can be quite severe.

About Google Book Search

Google's mission is to organize the world's information and to make it universally accessible and useful. Google Book Search helps readers discover the world's books while helping authors and publishers reach new audiences. You can search through the full text of this book on the web at `http://books.google.com/`

Digitized by Google

Digitized by Google

Digitized by Google

Digitized by Google

Digitized by Google

UP-TO-DATE

Air-Brake Catechism

THE ONLY PRACTICAL AND COMPLETE WORK PUBLISHED, TREATING ON THE EQUIPMENT MANUFACTURED BY THE WESTINGHOUSE AIR BRAKE COMPANY, INCLUDING THE ET LOCOMOTIVE BRAKE EQUIPMENT; THE K (QUICK-SERVICE) TRIPLE VALVE FOR FREIGHT SERVICE; THE TYPE L HIGH-SPEED TRIPLE VALVE; THE P C PASSENGER-BRAKE EQUIPMENT, AND THE CROSS COMPOUND PUMP. THE OPERATION OF ALL PARTS OF THE APPARATUS IS EXPLAINED IN DETAIL, AND A PRACTICAL WAY OF FINDING THEIR PECULIARITIES AND DEFECTS WITH A PROPER REMEDY IS GIVEN.

2,500 QUESTIONS WITH THEIR ANSWERS

are included. These are intended as examination questions for engineers and firemen, and all other railroad men preparing to pass an examination on the subject of air brakes. This book has been endorsed and used by air-brake instructors and examiners on nearly every railroad in the United States

By ROBERT H. BLACKALL

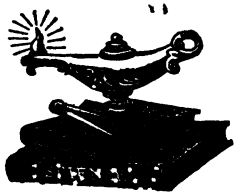

Fully Illustrated by Detail Engravings and Colored Plates

TWENTY-SEVENTH EDITION

ENTIRELY REVISED TO DATE

NEW YORK
THE NORMAN W. HENLEY PUBLISHING CO.
2 WEST 45TH STREET
1918

Digitized by Google

TF425
B6
1918

Copyrighted 1914, 1911, 1908 and 1907
By
THE NORMAN W. HENLEY PUBLISHING COMPANY

Copyrighted 1903, 1900 and 1898
By
NORMAN W. HENLEY & CO.

Composition, Electrotyping and
Presswork by Braunworth
& Co., Brooklyn, N. Y.

Digitized by Google

Dedication

THIS BOOK IS LOVINGLY DEDICATED
TO MY
FATHER AND MOTHER

Digitized by Google

387470

Digitized by Google

Preface to the Twenty-Seventh Edition

THE fact that this is the twenty-seventh edition of this book indicates that there is an urgent need for a book of this nature written on the question and answer plan, by means of which it is possible to readily locate the particular point upon which information is desired.

The air-brake art has almost completely changed in the last seven years, hence the necessity for an entirely new edition.

The changed conditions of service which now prevail, and which consist of longer trains, cars of heavier capacity and locomotives with power and weight commensurate with their increased duties, have made imperative some radical changes in the air brake. The original brake was designed with the idea in mind that the maximum length of train would be fifty cars, and the capacity of these cars 60,000 pounds. A large percentage of the cars of to-day have a capacity of 100,000 pounds, the number of cars in a train is often 100 and the hauling power of the locomotive has kept pace. The result of these changes has been that the apparatus which has been in use for so many years is not adequate to handle, with the desired efficiency, the long and heavy trains of to-day.

Passenger cars and engines have more than doubled in weight and it has also been necessary to re-design this equipment that stops may be possible within desirable and practical limits.

To meet these changed conditions in freight service

Digitized by Google

the Westinghouse Air Brake Company has developed new engine and car equipment by the use of which even better results are obtained with the long and heavy trains than could be obtained with the older equipment and shorter trains.

They have also developed a passenger car equipment which, aside from the improvements in the way of flexibility and other new features, will permit of this heavier equipment being brought to a stop in about the same distance as was accomplished with the older form of high-speed brake and the lighter equipment in general use during the previous ten years.

The author takes this opportunity of thanking those interested in the air-brake art for the generous and cordial support which former editions of this book have received.

August, 1918 ROBERT H. BLACKALL.

Digitized by Google

TABLE OF CONTENTS

CHAPTER I. PAGE

Beginnings of the Air Brake 17-20

CHAPTER II.

The Westinghouse Triple Valves—The Plain Triple Valve—Functions of the Triple Valve in the Operation of the Brake—Quick-Action Triple Valve—Peculiarities and Troubles of the Quick-Action Triple Valve—The Type "K" Triple Valve—The Type "L" Triple Valve 21-78

CHAPTER III.

Westinghouse Freight Equipment—Piston Travel—The American Automatic Brake-Slack Adjuster and Piston-Travel Regulator—Pressure Retaining Valves 79-112

CHAPTER IV.

Westinghouse Air Pumps—Nine and One-Half Inch Pump—Nine and One-Half Inch Pump, Peculiarities, Troubles, Care—Westinghouse "Right and Left-Hand" Nine and One-Half Inch Pump—Westinghouse Eleven Inch Pump—The Eight and One-Half Inch Cross-Compound Pump—The Present Standard (SF-4) Pump Governor 113-145

CHAPTER V.

Main Reservoir—G-6 Engineer's Brake Valve—Westinghouse Slide-Valve Feed Valve—The Equalizing Reservoir, or Little Drum, or Cavity D—Peculiarities and Troubles of the G-6 Brake Valve—Duplex Main-Reservoir Regulation, as Used with all Standard Westinghouse Equipments 146-177

CHAPTER VI.

Westinghouse Old-Style High-Speed Brakes—Double Pressure Control Equipment or Schedule U—Westinghouse Old-Style Combined Automatic and Straight Air-Brake Equipment for Engines and Tenders—Straight Air-Brake Valve 178-205

CHAPTER VII.

The Westinghouse No. 6 ET Locomotive Brake Equipment—Brake Valves for ET Equipment—H-6 Automatic Brake Valve—The S-6 Independent Brake Valve—The No. 6 Distributing Valve—Independent Application—Automatic Operation—The Quick-Action Cylinder Cap—The Use of the Safety Valve—

Digitized by Google

PAGE

Feed Valves—The B-6 Feed Valve—The C-6 Reducing Valve—The Pump Governor—Defects of ET Equipment—Principal Differences Between the No. 5 and No. 6 ET Equipments 206-260

CHAPTER VIII.

Air-Signal System—Peculiarities and Troubles of the Signal System 261-273

CHAPTER IX.

Braking, Power and Leverage—Sizes of Cylinders to be Used on Cars and Tenders—American Brake Leverage—Cam Brake—Air Hose—Air-Brake and Signal-Hose Specifications—Bursting Test—Friction Test—Stretching Test 274-298

CHAPTER X.

The Sweeney Compressor—The Water Brake—Water Brake on Simple Engine—The Baldwin Water Brake on Baldwin Compounds—Air-Brake Recording Gages—Lubricants 299-309

CHAPTER XI.

Train Inspection—Train Handling—Description of Tests—Piping 310-342

CHAPTER XII.

A Few Practical Formulæ and Rules for Air-Brake Inspectors 344-348

CHAPTER XIII.

The "PC" Passenger Brake Equipment—Object of Equipment—Novel Features—Names of Parts—How Various Features Are Obtained—The No. 3-E Control Valve—Control-Valve Portions—Duties of Each—Names of Parts—Parts and Their Connections—Normal Position—Release Position, Charging Pressure Chamber and Reservoirs—Preliminary Service Position—Secondary Service Position—Service Position—Service Lap Position—Over-Reduction Position—Over-Reduction Lap Position—Preliminary Release Position—Secondary Release Position—Graduated Release Position—Graduated Release Lap Position—Direct Release Position—Emergency Position—Brake Cylinders—Handling of Brake Valve—Location of Exhaust Outlets—Treatment for Leaks at Exhaust Outlets—Lubrication of Control Valve—Common Exhaust Reservoir 349-404

The Centrifugal Dirt Collector—Purpose—Location—Operation—Cleaning 405-406

Digitized by Google

LIST OF ILLUSTRATIONS

OF

WESTINGHOUSE AIR BRAKE AND SIGNAL EQUIPMENT

Fig. 1. Old Style Plain Triple Valve, Release Position.... 23
Fig. 2. Plain Triple Valve, Service Position..... 25
Fig. 3. Plain Triple Valve, Lap Position..... 26
Fig. 4. Plain Triple Valve, Emergency Position..... 30
Fig. 4A. **Colored Plate of Old Standard Quick-Action Triple Valve—Release and Charging Position**....facing 36
Fig. 5. Quick-Action Triple Valve, Release Position..... 37
Fig. 6. Quick-Action Triple Valve, Service Position..... 38
Fig. 7. Quick-Action Triple Valve, Lap Position..... 39
Fig. 8. Quick-Action Triple Valve, Emergency Position.... 42
Fig. 9. Slide Valve Bushing..... 43
Fig. 10. Slide Valve..... 43
Fig. 11. K Triple Valve—Exterior View..... 54
Fig. 12. K Triple Valve—Cross Section..... 55
Fig. 13. K Triple Valve—Graduating Valve, Slide Valve, and Slide-Valve Seat..... 57
Fig. 14. K Triple Valve—Full Release..... 58
Fig. 15. K Triple Valve—Service Position..... 59
Fig. 16. K Triple Valve—Service-Lap Position..... 60
Fig. 17. K Triple Valve—Retarded Release Position..... 61
Fig. 18. K Triple Valve—Emergency Position..... 62
Fig. 19. Type L Triple Valve..... 64
Fig. 20. Type L Triple Valve..... 65
Fig. 21. Diagram of Type L Triple Valve—Release and Charging Position..... 66
Fig. 22. Diagram of Type L Triple Valve—Quick-Service Position..... 67
Fig. 23. Diagram of Type L Triple Valve—Service-Lap Position..... 68
Fig. 24. Diagram of Type L Triple Valve—Full-Service Position..... 69

Digitized by Google

Fig. 25. Diagram of Type L Triple Valve—Release-Lap Position 70
Fig. 26. Diagram of Type L Triple Valve—Emergency Position 71
Fig. 27. Westinghouse Freight Equipment 80
Fig. 28. Showing Application of American Brake Slack Adjuster to a Passenger Car Equipment 95
Fig. 29. Sectional End View of American Automatic Brake-Slack Adjuster 97
Fig. 30. Showing Proper Method of Drilling Brake Cylinders When Used with the American Automatic Brake-Slack Adjuster 100
Fig. 31. Sectional View of Pressure-Retaining Valve 103
Fig. 32. The Westinghouse Double-Pressure Retaining Valve 105
Fig. 33. Retaining Valve Used with 12, 14, and 16-inch Brake Cylinders 110
Fig. 34. "Pullman" Retaining Valve, Used on Vestibule Cars 110
Fig. 35. Standard Retaining Valve Used with 6, 8 and 10-inch Brake Cylinders 110
Fig. 36. Driver-Brake Retaining Valve 111
Fig. 36A. **Colored Plate—Nine and One-Half-Inch Pump** .. facing 113
Fig. 37. Westinghouse 9½-inch Air Pump 114
Fig. 37A Westinghouse 9½-inch Air Pump 115
Fig. 38. Right and Left-Hand Pump 127
Fig. 39. Eight and One-Half Cross-Compound Pump 130
Fig. 40. Diagram of Cross-Compound Pump—Up Stroke High-Pressure Side 132
Fig. 41. Diagram of Cross-Compound Pump—Down Stroke, High-Pressure Side 133
Fig. 42. Old Standard Pump Governor 140
Fig. 43. **Colored Plate—Present Standard (SF-4) Pump Governor** ..... facing 143
Fig. 44. Main Reservoir Drain Cock 149
Fig. 45. D-8 Engineer's Brake Valve—Release Position 151
Fig. 46. G-6 Engineer's Brake Valve—Release Position 152
Fig. 47. G-6 Engineer's Brake Valve—Running Position ... 153
Fig. 48. G-6 Engineer's Brake Valve—Plan View 154
Fig. 49. Feed Valve—Section Through Supply Valve Piston 162
Fig. 50. Feed Valve—Section Through Regulating Part 163
Fig. 51. Rotary Valve of G-6 Brake Valve (top view) 164

Digitized by Google

Fig. 52. Bottom View of Rotary Valve of G-6 Brake Valve.. 164
Fig. 53. The Little Drum, or Cavity D..... 167
Fig. 54. Diagram of Westinghouse Duplex Main—Reservoir Regulation 175
Fig. 55. Method of Drilling Brake Valve for Duplex Main—Reservoir Regulation..... 176
Fig. 56. Method of Drilling Brake Valve for Duplex Main—Reservoir Regulation..... 176
Fig. 57. High-Speed Automatic Reducing Valve..... 180
Fig. 57A. Diagrammatic Illustration of Old Style Westinghouse High-Speed Brake Equipment..... 182
Fig. 58. Section of High-Speed Reducing Valve, Showing Position of Ports in Emergency Stop..... 184
Fig. 59. Section of High-Speed Reducing Valve, Showing Position of Ports with Cylinder Pressure Slightly Exceeding 60 Pounds..... 184
Fig. 60. Section of High-Speed Reducing Valve, Showing Position of Ports in Release Position..... 184
Fig. 61. Showing Location of High-Speed Automatic Reducing Valve Under Car..... 186
Fig. 62. Progress of Air Brake Efficiency as Shown by Comparative Distances in Which Trains Are Stopped 188
Fig. 62A. Diagrammatic Illustration of Westinghouse Double-Pressure Control Apparatus or Schedule U..... 190
Fig. 63. Old Style Safety Valve..... 192
Fig. 64. New Style Safety Valve..... 192
Fig. 64A. Combined Automatic and Straight Air Brake Equipment as Applied to Freight Engine and Tender 194
Fig. 65. Double Check Valve..... 196
Fig. 66. Straight-Air Brake Valve..... 199
Fig. 67. Straight-Air Brake Valve..... 199
Fig. 68. Straight-Air Brake Valve..... 200
Fig. 69. Straight-Air Brake Valve..... 200
Fig. 70. Section Through Straight-Air Brake Valve..... 200
Fig. 71. **Colored Plate—Piping Diagram of No. 6 E T Equipment**..... facing 207
Fig. 72. The H-6 Automatic Brake Valve..... 212
Fig. 73. **Colored Plate—The H 6 Automatic Brake Valve** facing 213
Fig. 74. Brake Valves—Positions of Handles..... 214

Digitized by Google

Fig. 75. H-6 Automatic Brake Valve..... 216
Fig. 76. S-6 Independent Brake Valve..... 222
Fig. 77. **Colored Plate—The S-6 Automatic Brake Valve** facing 223
Fig. 78. Interior Views of the S-6 Independent Brake Valve 224
Fig. 78A. **Distributing Valve in Released and Charging Position** .....facing 228
Fig. 79. Distributing Valve and Double Chamber Reservoir 229
Fig. 80. Distributing Valve and Double Chamber Reservoir 229
Fig. 81. Release Position—Automatic or Independent..... 230
Fig. 82. Independent Application..... 231
Fig. 83. Independent Lap..... 232
Fig. 84. Automatic Service..... 233
Fig. 85. Service Lap..... 234
Fig. 86. Emergency 235
Fig. 87. Emergency Lap..... 236
Fig. 88. Independent Release When Brake Has Been Applied Automatically 237
Fig. 89. Emergency When the Quick-Action Cap Is Used.. 238
Fig. 90. Graduating Valve, Equalizing Slide Valve and Slide Valve Seat..... 239
Fig. 91. Distributing Valve, Showing Connections..... 242
Fig. 92. Quick-Action Cylinder Cap..... 248
Fig. 93. B-6 Feed Valve..... 252
Fig. 94. Single Equipment for Engine With Engines Not Equipped With Schedule E T..... 262
Fig. 95. Location of Signal Apparatus on Coach..... 263
Fig. 96. Air Strainer on Engine..... 264
Fig. 97. Car Discharge Valve..... 265
Fig. 98. Westinghouse Signal Valve..... 266
Fig. 99. Westinghouse Signal Reducing Valve..... 267
Fig. 100. Signal Whistle..... 268
Fig. 101. Lever of First Class..... 277
Fig. 102. Lever of First Class Applied to Car Wheel..... 279
Fig. 103. Lever of Second Class..... 280
Fig. 104. Lever of Second Class, Applied to Car Wheel.... 281
Fig. 105. Lever of Third Class..... 281
Fig. 106. Lever of Third Class, Applied to Car Wheel..... 281
Fig. 107. Hodge System of Leverage..... 283
Fig. 108. Stevens System of Leverage..... 287

Digitized by Google

Fig. 109. Hodge System of Leverage..... 287
Fig. 110. Leverage System for Tenders..... 287
Fig. 111. American Driver—Brake Leverage 289
Fig. 112. Showing Markings on Air-Hose 295
Fig. 113. Method of Testing Hose..... 297
Fig. 114. Water Brake on Simple Engine..... 301
Fig. 115. Baldwin Water Brake for Compound Engines—Side View 303
Fig. 116. Baldwin Water Brake for Compound Engines—Front View 304
Fig. 117. Air-Brake Recording Gauge—Revolving Type..... 308
Fig. 118. PC Passenger Brake Equipment, Cylinders Pointing in Opposition Directions (Plate)..opposite 349
Fig. 119. PC Passenger Brake Equipment, Cylinders Pointing in Same Direction (Plate).....opposite 349
Fig. 120. No. 3-E Control Valve, Side View 356
Fig. 121. No. 3-E Control Valve, Front View 357
Fig. 122. No. 3-E Control Valve, Showing Different Portions of the Valve 357
Fig. 123. No. 3-E Control Valve, Outline 358
Fig. 124. No. 3-E Control Valve, Outline 359
Fig. 125. No. 3-E Control Valve, Actual Section 360
Fig. 126. No. 3-E Control Valve, Actual Section 361
Fig. 127. Equalizing Graduating Valve, Slide Valve, and Slide Valve Seat 362
Fig. 128. Release Graduating Valve, Slide Valve, and Slide Valve Seat 363
Fig. 129. Emergency Slide Valve and Slide Valve Seat..... 364
Fig. 130. Diagram, Normal Position 366
Fig. 131. Diagram, Release Position Charging Pressure Chamber and Reservoirs 367
Fig. 132. Diagram, Preliminary Service Position 370
Fig. 133. Diagram, Secondary Service Position..... 371
Fig. 134. Diagram, Service Position 373
Fig. 135. Diagram, Service Lap Position 376
Fig. 136. Diagram, Over-Reduction Position 378
Fig. 137. Diagram, Over-Reduction Lap Position 380
Fig. 138. Diagram, Preliminary Release Position 382
Fig. 139. Diagram, Secondary Release Position 383
Fig. 140. Diagram, Graduate Release Position 385

Digitized by Google

Fig. 141. Diagram, Graduated Release Lap Position 387
Fig. 142. Diagram, Direct Release, Charging Pressure Chamber Only 389
Fig. 143. Diagram, Emergency Position, Quick-Action Valve Venting 391
Fig. 144. Diagram, Emergency Position, Quick-Action Valve Closed 392
Fig. 145. Brake Cylinder Used With the PC Equipment.... 395
Fig. 146. Section Through Control Valve Reservoir Having Common Exhaust 402
Fig. 147. Control Valve, Common Exhaust Reservoir, Side View 403
Fig. 148. Control Valve With Common Exhaust Reservoir, Outline 404
Fig. 149. Centrifugal Dirt Collector 406

Digitized by Google

AIR-BRAKE CATECHISM

CHAPTER I.

BEGINNINGS OF THE AIR BRAKE

Q. What is an air brake?

A. A brake operated by compressed air.

Q. What was the first form of air brake used?

A. The straight air brake.

Q. By whom and when was it invented?

A. By George Westinghouse, in 1868.

Q. What forms of brake did it supplant?

A. The hand and the spring brakes.

Q. What parts were necessary to operate the straight air brake?

A. An air pump, main reservoir, a valve called the three-way cock used to control the application and release of the brakes, a brake pipe, and brake cylinders.

Q. What parts were on the engine?

A. A main reservoir, pump, and engineer's valve.

Q. What parts were on the car?

A. The brake pipe and cylinder.

Q. Where was the braking power stored with this system?

A. In the main reservoir on the engine.

Q. How were the brakes applied?

A. By changing the position of the three-way cock on the

Digitized by Google

engine so as to allow the main reservoir pressure to flow into the brake pipe. The brake pipe, connected directly with the brake cylinder, allowed air to pass into the cylinder, forcing the piston out and applying the brake.

Q. Why was this brake unsatisfactory?

A. For several reasons. First, the tendency of the brakes was to apply first at the head end of the train. If they were applied suddenly the slack running ahead would cause severe shocks and damage. Second, if a hose burst in the train, the brakes could not be set with air, as it would pass out through the burst hose to the atmosphere. Third, on a long train the main-reservoir pressure would equalize with that in the brake pipe and brake cylinders at a low pressure on account of the large space to be filled; before the brakes were fully set the engineer would have to allow the pump to compress air into the brake pipe, and brake cylinders, and before maximum braking power was obtained the train would be stopped. Fourth, the effect of friction on the flow of air from the main reservoir through a long train made this brake apply much slower.

Q. What was the next form after the straight air brake?

A. The plain automatic.

Q. By whom and when was it invented?

A. By George Westinghouse, in 1873.

Q. What brake followed the plain-automatic brake?

A. The quick-action brake, which almost immediately superseded the plain-automatic brake in passenger service, and did very quickly in freight service. With this improved apparatus the brake on the last of a fifty-car train could, if so desired, be applied in two and one-half seconds from the movement of the brake valve handle on the engine.

Google

Q. Is the quick-action brake still in use?

A. Yes; all passenger and freight cars are now equipped with this brake, but at present a modified form is in general use in passenger, mail and express service. The modified form is known as the high-speed brake, the operation of which is described in another part of this book.

Q. Have any modifications in the general equipment of the quick-action brake been made in freight service?

A. Not in the car equipment itself aside from the addition of the retaining valve, and the modification of certain details to render the apparatus more effective for conditions now existing.

Q. What changes have been made in the engine equipment?

A. The engine equipment has been gradually developed to meet modern conditions. The modifications include double-pressure control apparatus, commonly known as schedule U, the duplex method of main reservoir regulation, and the combined automatic and straight-air brake, all of which are illustrated and described in detail in other parts of this book. Within the past three years, a complete and new engine, freight and passenger car equipment has been developed by the Westinghouse company.

Q. What else has been developed along wth the air-brake apparatus used in passenger service?

A. The air signal system.

Q. What gains over the hand brake are made with the air brake?

A. With a train of fifty modern equipped air-brake cars, a full and harder set brake is obtained on the entire train more quickly than a hand brake can be set on one car. Since trains handled on heavy grades have to be slowed down for the purpose of recharging, by this means the wheels are given

Digitized by Google

a chance to cool. With the hand brakes used on heavy grades, the shoes grind against the wheels down nearly, or quite all the grade so that often the train is wrecked because the wheels are heated to so high a temperature that they break, especially where only part of the brakes are used, or where the efficiency varies greatly. Air brakes give us an increased speed of trains with greater safety.

Digitized by Google

CHAPTER II.

THE WESTINGHOUSE TRIPLE VALVES

Q. Where was the difference in the car equipment between the straight-air and automatic brake made?

A. Besides the brake pipe and brake cylinder, a plain triple and an auxiliary reservoir were added to the car.

Q. With the cars equipped with the automatic brake, what gain was made over the straight-air brake?

A. (1) The necessary braking power for each car, regardless of the length of the train, was stored in the auxiliary reservoir under that car, so that the brakes could be fully set very quickly, as compared with the action of the straight-air brake. (2) If the train broke in two or a hose burst, the triples would automatically apply the brakes; whereas with the straight-air the brakes could not be applied.

Q. What was the essential feature of the automatic brake?

A. The *plain triple valve.*

Q. Where was it located?

A. On the car, at the junction of the brake pipe, auxiliary reservoir, and brake cylinder.

Q. Did the pump and three-way cock remain on the engine?

A. Yes; this was left for later development.

THE PLAIN TRIPLE VALVE.

Q. In the study of the triple valve what is the main thing to be borne in mind in order to understand its oper-

Digitized by Google

ation and its probable action under the many and varied conditions which are encountered in actual service?

A. In the study of the triple valve, as well as almost any other part of the air-brake or air-signal apparatus, a clearer understanding will result if one starts at a problem by first asking himself the question, Which is the greater or controlling pressure acting on the part under consideration? With this point thoroughly understood the resultant action of the parts in question can be readily traced; for instance, if a brake is applied, and there is a leak in the auxiliary reservoir, we know that this will have the effect of lowering the pressure on one side of the triple piston. We then know that the tendency will be for the piston to move away from the greater brake pipe pressure, and, as will be explained later, this effect will cause the release of the brake in question.

Q. Name the different parts of the plain triple valve, Figs. 1 to 4.

A. 13 and 15 are the cut-out cock and the handle; 8, the graduating post; 9, the graduating spring; *m* and *n* are feed ports; 5 is the triple piston; 6, the slide valve; 7 is the graduating valve which works inside the slide valve; 12, a piston-packing ring; 18, slide-valve spring; *Y*, the port leading to the auxiliary reservoir; *X* leads to brake cylinder; *W* leads to brake-pipe pressure.

Q. For what are valve 13 and handle 15 used?

A. They permit the triple to be used with the straight air-brake, automatic brake, or cut out entirely, as illustrated by the cut (Fig. 1).

Q. What three positions has the handle 15 (Fig. 1)?

A. As shown in the cut, by the different positions of the handle: so that the triple would be cut in, as it is with the handle 15 at right angles to the triple; pointing straight down, in which case, air coming in at W from the brake pipe would

go through port *e* of the plugcock 13 and out into the brake cylinder through *X;* or the handle could stand at an angle of 45°, in which position ports *f, a* and *d* would all be blanked.

In the first position the triple is cut in for automatic, in

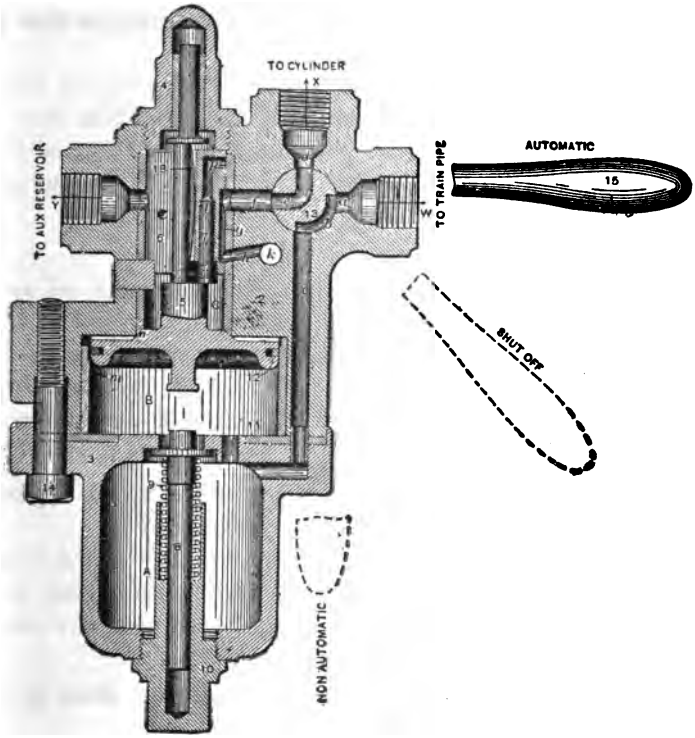

FIG. 1.—OLD STYLE PLAIN TRIPLE VALVE, RELEASE POSITION.

the second for straight air, and in the third the triple is cut out entirely.

Q. Can the modern plain triple now sent out be cut into straight air?

A. No.

Digitized by Google

Q. Why not?

A. Because, as shown in Figs. 2, 3 and 4, the handle 15 and plug 13 are no longer used. The cut-out cock is now placed in the crossover pipe.

Q. Why was it necessary to have it so arranged that it could be cut in as straight air?

A. When the brakes were gradually being changed from straight air to automatic, it sometimes happened that only a few cars in the train had the triple applied. In this case the handle 15 was turned so as to cut the car into straight air to be used with the other straight-air cars.

Q. Of what use are 8 and 9 (Fig. 1)?

A. In applying the brakes, when piston 5 moves out and touches the stem 8, held by the graduating spring 9, (Fig. 1), the piston is stopped, if a gradual reduction is being made in the brake-pipe, when the piston has drawn the slide valve down far enough to make a port connection between the auxiliary and cylinder.

Q. If a quick reduction is being made in the brake-pipe, will the spring 9 stop the triple piston?

A. No; a quick reduction causes the triple piston 5 to move down quickly, and the sudden impact compresses the spring 9, allowing the piston 5 to move down until it strikes gasket 11, to what is known as emergency position.

Q. 5 (Fig. 1) is called the triple piston. How is it actuated?

A. Brake-pipe pressure is on the lower side of the piston and auxiliary pressure on the upper or slide-valve side. It is by changing these pressures that the piston is moved.

Q. What are the duties of the piston as it moves?

A. To open and close the feed ports *m* and *n* (Fig. 1) through which the brake-pipe pressure flows into the auxil-

iary reservior, to move the graduating valve 7 and the slide valve 6.

Q. What is the duty of the graduating valve 7 (Fig. 1)?

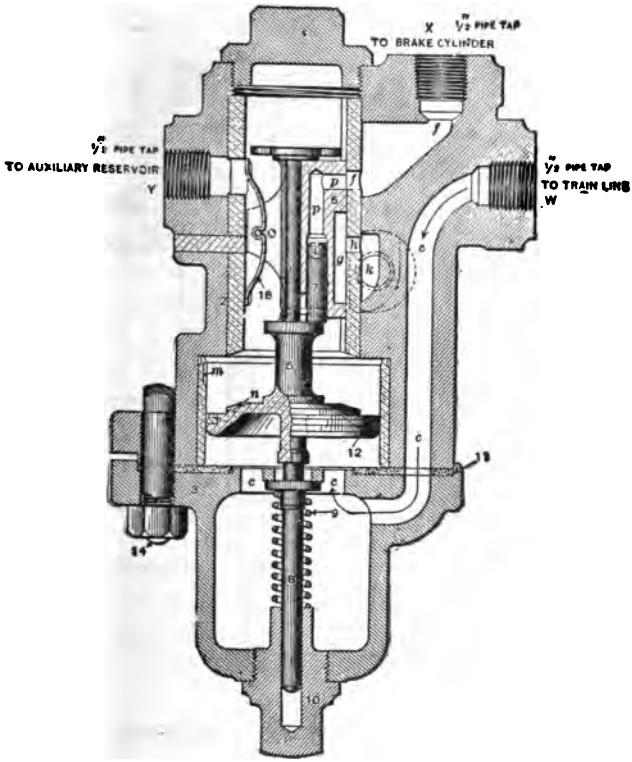

FIG. 2.—PLAIN TRIPLE VALVE, SERVICE POSITION.

A. It is the small valve inside the slide valve, and its duty as it is moved downward and upward by the triple piston is to open and close the port p through which, in the

Digitized by Google

service application, auxiliary-reservoir pressure flows to the brake cylinder.

Q. Does the graduating valve move every time the triple piston moves?

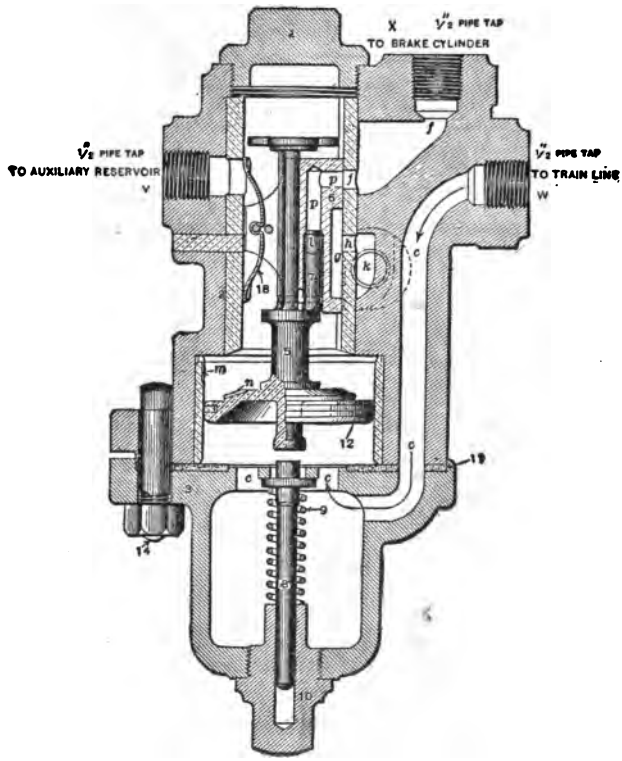

FIG. 3.—PLAIN TRIPLE VALVE, LAP POSITION.

A. Yes, because it is fastened to the stem of the piston by a pin which passes through both the graduating valve and the stem of the triple piston. The pin is represented by

the dotted lines running through the lower end of the graduating valve at right angles to it.

Q. Could we get along without the graduating valve?

A. Yes, but the sensitiveness of the triple would be destroyed.

Q. How does the graduating valve make the triple sensitive?

A. A reduction of brake-pipe pressure causes the triple to assume service position, and after the auxiliary pressure has expanded to a trifle below that in the brake-pipe, piston 5 (Fig. 3), moves up and closes the graduating valve on its seat. Brake-pipe pressure had simply to overcome the friction on the triple piston-packing ring to do this, but had we no graduating valve the brake-pipe pressure would have had to be strong enough to overcome the additional friction of the slide valve to move it back far enough to close port *p*. When wishing to apply brakes harder, a heavier reduction would be necessary to again move the slide valve to service position. By the use of the graduating valve, the slide valve is moved to service position with the first reduction, where it remains until the brake is released or in case the emergency is used.

Q. What are the duties of the slide valve?

A. In the plain triple, when moved by the triple piston, it serves to make a connection between the auxiliary-reservoir and the brake cylinder or between the brake cylinder and the atmosphere.

Q. Does the slide valve move every time the piston moves?

A. No; the slide valve will not move when the piston starts down until it has moved far enough for the lug just above 18 (Fig. 1) to strike the valve. Also, if the piston is down full stroke; when it starts back the slide valve will

Digitized by Google

not move until the piston has gone back far enough to seat the graduating valve.

Q. Of what use is the spring 18, Fig. 1?

A. Its duty is to hold the slide valve on its seat and to prevent dirt from collecting there when there is no auxiliary-reservoir pressure to hold the valve on its seat, as when the car is "dry."

Q. What is the difference in the four triple valves shown in Figs. 1, 2, 3, and 4.

A. They are all plain triple valves, but the one showing release position is the older type which could be cut into straight air. The other three represent the modern valve which is cut out or in by means of a cutout cock placed in the cross-over pipe between the drain cup and triple valve.

FUNCTIONS OF THE TRIPLE VALVE IN THE OPERATION OF THE BRAKE.

Q. Why is this valve called the triple valve?

A. Because it automatically does three things: charges the auxiliary-reservoir, applies the brake, and releases it.

Q. If an engine couples to a car that is not charged, how does the triple charge the auxiliary reservoir on the car when the hose is coupled and the angle cocks turned so as to allow the compressed air to flow into the brake-pipe on this car from the engine?

A. A cross-over pipe from the brake-pipe couples to the triple at *W* (Fig. 1.) The pressure from the brake-pipe passes into the triple at *W*, through port *c* as indicated by the arrow into cavity *B*; thence through the feed ports *m* and *n* into the chamber where the slide valve moves and out into the auxiliary-reservoir at *Y*.

Digitized by Google

Q. How long does the air continue to flow into the auxiliary reservoir?

A. Just as long as the brake-pipe pressure is greater than that in the auxiliary, that is, until the pressures are equal on the two sides of the triple piston 5.

Q. How are the two sides of the piston referred to?

A. The lower side, having pressure on it, is called the brake-pipe side of the piston, and the upper side, having auxilary-reservoir pressure on it, the auxiliary or slide-valve side.

Q. What is necessary to cause piston 5 (Fig. 1) to move from release position?

A. Any reduction of brake-pipe pressure; a break in the hose; the use of his valve by the engineer to make a brake-pipe reduction.

Q. If a reduction of brake-pipe pressure is made, how does the triple respond?

A. Auxiliary-reservoir pressure now being greater forces the triple piston down.

Q. What two things does the piston do when it starts to move down?

A. It closes the feed grooves *m* and *n* and moves the graduating valve from its seat.

Q. Does the slide valve move as soon as the piston?

A. No, not until the lug above 18 (Fig. 1) is drawn down far enough to rest against the slide valve.

Q. What does the slide valve do as soon as the lug strikes and moves it down?

A. It first closes the exhaust port *g* which in release position connected the brake cylinder with the atmosphere through *X, d, e, f, g, h* and *k*.

Digitized by Google

Q. How far down does the triple piston travel?

A. Until the projecting stem of the piston strikes the stem 8 held by the graduating spring 9 (Fig. 2).

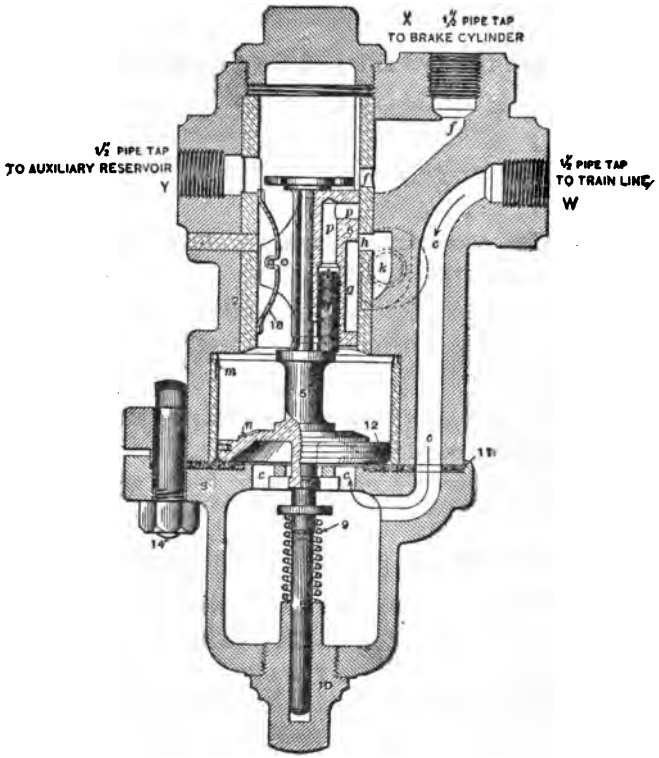

FIG. 4.—PLAIN TRIPLE VALVE, EMERGENCY POSITION.

Q. When these stems touch, how does the slide valve stand?

A. Port *p* of the slide valve is in front of port *f*, and, as the graduating valve was pulled from its seat when the pis-

Digitized by Google

ton first moved, the auxiliary-reservoir pressure is now free to pass into the slide valve through port *t*, called the service or graduating port, which leads into port *p*. The air passes throught ports *l, p, p, f, f,* and out throught *X* to the brake cylinder.

Q. How long does the graduating valve remain off its seat so as to allow auxiliary reservoir pressure to flow to the brake cylinder?

A. We reduced the brake-pipe pressure to allow the greater auxiliary-reservoir pressure to move the piston down and open the service or graduating port *p* between the auxiliary and cylinder. Just as long as the auxiliary pressure is greater, the piston will stay down and the graduating valve remain unseated. As the auxiliary pressure expands into the brake cylinder it gradually becomes less until, when the brake-pipe pressure becomes enough greater than that in the auxiliary to overcome the friction on the packing ring 12 (Fig. 3), the piston automatically moves back and seats the graduating valve.

Q. Does the slide valve move?

A. No, not now.

Q. Why not?

A. The brake-pipe pressure was just strong enough to overcome the friction on the packing ring 12, move the piston back, and close the graduating valve. With the ports all closed, the piston would also have to compress the air in the auxiliary to go back any farther. Then, too, the pressure left in the auxiliary-reservoir, acting to force the slide valve on its seat produces a friction, if the valve were moved that the brake-pipe pressure as it stands is not sufficiently strong to overcome.

Q. How do the auxiliary reservoir and brake-pipe pressures now stand?

A. Practically equal although the auxiliary pressure had

to be a trifle less to allow the triple piston to be moved back sufficiently to seat the graduating valve.

Q. The brake is now partially applied and the triple is on what is termed lap position; what must be done to apply the brake harder?

A. Another reduction of brake-pipe pressure must be made.

Q. How does this set the brake tighter?

A. The auxiliary pressure once more being greater than that in the brake-pipe forces the triple piston down until it is again stopped by the graduating post. This movement is just sufficient to unseat the graduating valve the slide valve remaining where it was with its service port *p* (Fig. 2) in front of that to the brake cylinder. About the same amount of air pressure passes from the auxiliary to the cylinder that was taken from the brake-pipe and the piston once more having a trifle more pressure on the brake-pipe than on the auxiliary side moves back sufficiently to seat the graduating valve.

Q. How long can these brake-pipe reductions continue to be made and cause the brake to set harder?

A. Until the pressures have finally equalized between the auxiliary-reservoir and the brake cylinder.

Q. After the auxiliary and brake-cylinder pressures were equal, would the brake set any harder if all brake-pipe pressure were allowed to escape to the atmosphere?

A. No; when the brakes are fully set the auxiliary-reservoir and brake-cylinder pressures are equal, and a further reduction of brake-pipe pressure would only be a waste of air that the pump would have to replace to release the brakes.

Q. If a further brake-pipe reduction were made after the brake was fully set, would piston 5 (Fig. 1) move any farther than until the piston and graduating post touched?

A. Yes; the spring 9 could not withstand the auxiliary-

Digitized by Google

reservoir pressure, as it is so much in excess of the reduced brake-pipe pressure, and the piston would move down until it seated on gasket 11. In this position there would be a direct connection by the end of the slide valve between the auxiliary-reservoir and brake cylinder, but the brake would not set any tighter, as the auxiliary-reservoir, and brake-cylinder pressures were already equal.

Q. The brake is now fully set. What is necessary to release it?

A. It is necessary to get the pressure on the brake-pipe side of the triple piston greater than that on its auxiliary-reservoir side.

Q. How is this done?

A. By moving the handle of the engineer's valve so as to connect the pressure, stored in the large main reservoir on the engine, with the brake-pipe. Air flowing from the main reservoir into the brake-pipe causes the pressure on the side of the triple piston to be sufficiently strong to overcome auxilary-reservoir pressure and force the triple piston to release position.

Q. When the triple is forced to release position the slide and graduating valves are carried with it. What two port openings are made in this position?

A. One between the brake-pipe and auxiliary-reservoir through the feed ports *m* and *n* (Fig. 1); and one from the brake cylinder to the atmosphere through ports *d, e, f, g, h* and *k*. The triple is in release as shown in the cut.

Q. We notice that the feed grooves m and n (Fig. 1) are very small. How long would it take to charge an auxiliary reservoir from zero to seventy pounds with a constant pressure of seventy pounds in the brake-pipe, using the triple now sent out?

A. About seventy seconds; and occasionally a little longer.

Digitized by Google

Q. Will it charge more quickly than this with a greater pressure than seventy pounds in the brake-pipe?

A. Yes.

Q. Had we a train of fifteen cars, could we charge the fifteen auxiliary reservoirs as fast as we could one?

A. No, because we now have fifteen feed grooves in the triples drawing air from the brake-pipe, and the pump cannot compress air fast enough to keep the brake-pipe pressure at seventy pounds.

Q. Why not make these feed grooves larger so as to charge the auxiliary reservoirs more quickly?

A. The purpose is to make the grooves sufficiently small that on a long train the auxiliaries will charge as nearly as possible alike. On a long train there is a tendency for the head auxiliaries to charge much faster than the rear ones, if the triple feed grooves are larger than those now used.

Q. What is likely to happen if some auxiliary reservoirs charge faster than others?

A. As the air is fed from the main reservoir back into the brake-pipe until those pressures are equal, and as the pump will not, on a long train, supply air as fast as the triple feed grooves take it from the brake-pipe. it follows that the auxiliaries which charge the slower will continue to feed from the brake-pipe and cause a reduction that will set some of the head brakes.

Q. So far we have spoken of the action of the plain triple only in the service application. What is the difference in the action between the service and the emergency?

A. In service the brakes set gradually while in emergency they go on very suddenly.

Q. A gradual reduction sets the brakes in service.

Digitized by Google

What kind of a reduction is necessary to set the brakes in emergency?

A. A sudden reduction.

Q. Describe the emergency action of the plain triple.

A. The suddenness of the brake-pipe reduction causes piston 5 (Fig. 4) to move down suddenly, striking the stem 8 a quick, sharp blow which the graduating spring 9 is not stiff enough to withstand. The piston travels down full stroke and bottoms on gasket 11. This is emergency position, and the slide valve has been drawn down so that air coming through *Y* from the auxiliary-reservoir passes by the end of the slide valve directly into the large port *f* leading to the brake cylinder without first going through the small service port *p* in the slide valve, as it did in the service position.

Q. Why does the brake set more quickly?

A. Because the air goes directly to the cylinder through a larger port than is used in service.

Q. Do we gain any more pressure with the plain triple in emergency than in full service?

A. No; in both cases the auxiliary-reservoir pressure equalizes with that in the brake cylinder, but in emergency these pressures equalize more quickly because of the air reaching the brake cylinder through a larger port.

Q. Are plain triples still used?

A. Yes, but they are used almost entirely on engines and tenders. Their use on cars is confined principally to a very few of those equipments put on before the quick-action triple was introduced.

Q. Where triples are used, is a plain triple valve always used on tenders?

A. No; the present practice is to use a plain triple valve on the tenders of freight and switch engines; on the tenders

of passenger engines a quick-action triple valve is being used more generally.

Q. What has led to the use of a quick-action valve on passenger-engine tenders?

A. The general introduction of the high-speed brake in passenger, mail, and express service is responsible for this practice having become general, although some roads have been using quick-action triples on their tenders in both freight and passenger service for some time. The quick-action triple on the tender is especially desired to help carry a sudden reduction through the second engine in an emergency application when double-heading.

Q. Is present equipment being fitted with plain or quick-action triple valves.

A. Neither, the ET engine and tender equipment is being almost exclusively applied.

QUICK ACTION TRIPLE VALVE.

Q. When and by whom was the quick-action triple invented?

A. In 1887, by George Westinghouse.

Q. We have already had the plain triple valve. Why was the quick-action triple valve necessary?

A. The plain triple valve was satisfactory so long as only the service application was used, but not so with the emergency application on a long train. In this latter case the head brakes were fully set so much sooner than those on the rear, that the slack of the train ran ahead and often did great damage.

Q. What two important advantages are gained by the quick-action triple valve?

A. We are enabled by the quick-action feature to set the

Digitized by Google

UNIV. OF CALIFORNIA

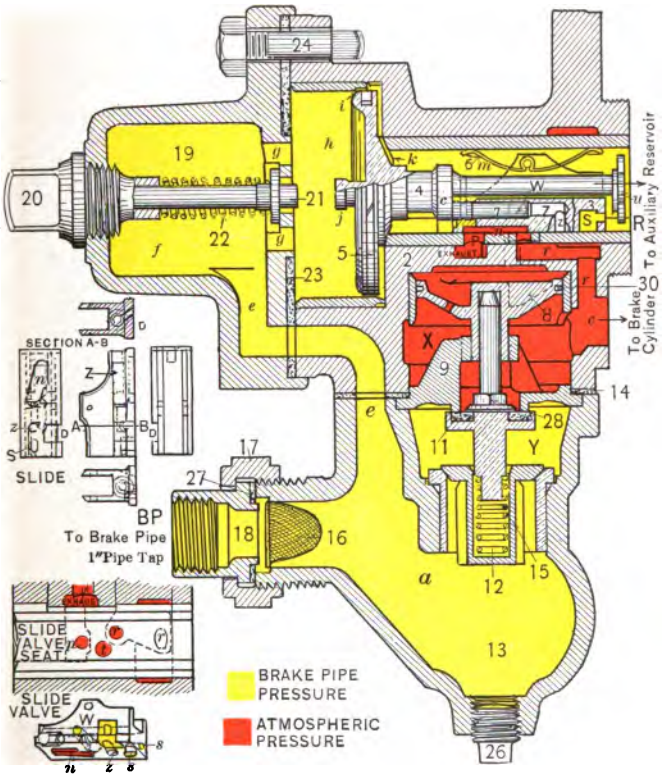

Digitized by Google

UNIV. OF
CALIFORNIA

Digitized by Google

brakes throughout the train before the slack has a chance to run ahead and do damage, and not only does the brake set more quickly in emergency, but it is also set harder, thus permitting a quicker stop and a higher safe speed for trains.

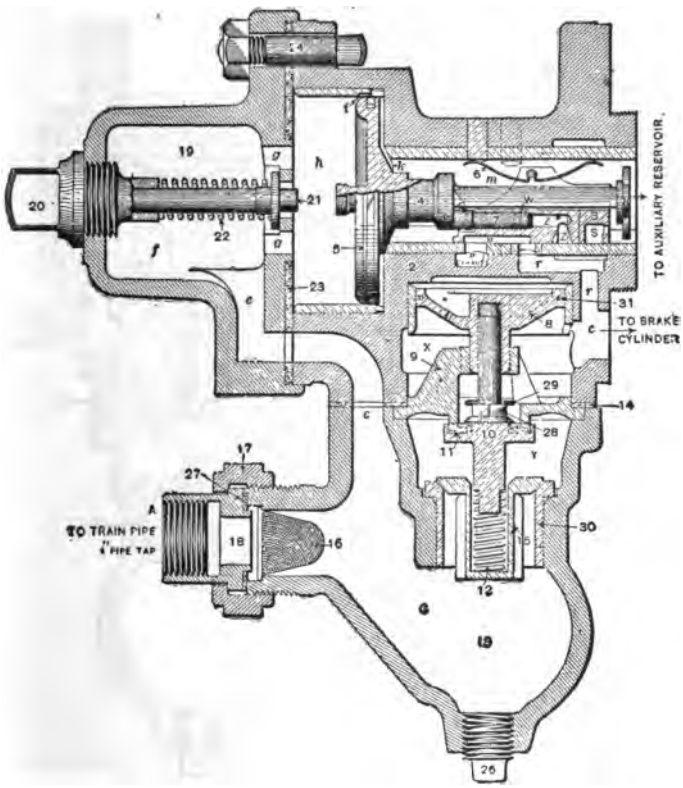

FIG. 5.—QUICK-ACTION TRIPLE VALVE, RELEASE POSITION.

Q. In the use of the service application, what is the difference between the action of the plain and the quick-action triples?

Digitized by Google

A. None whatever; their action and the parts employed are identical, excepting the additional ports placed in the slide valve of the quick-action triple, which are used only in emergency.

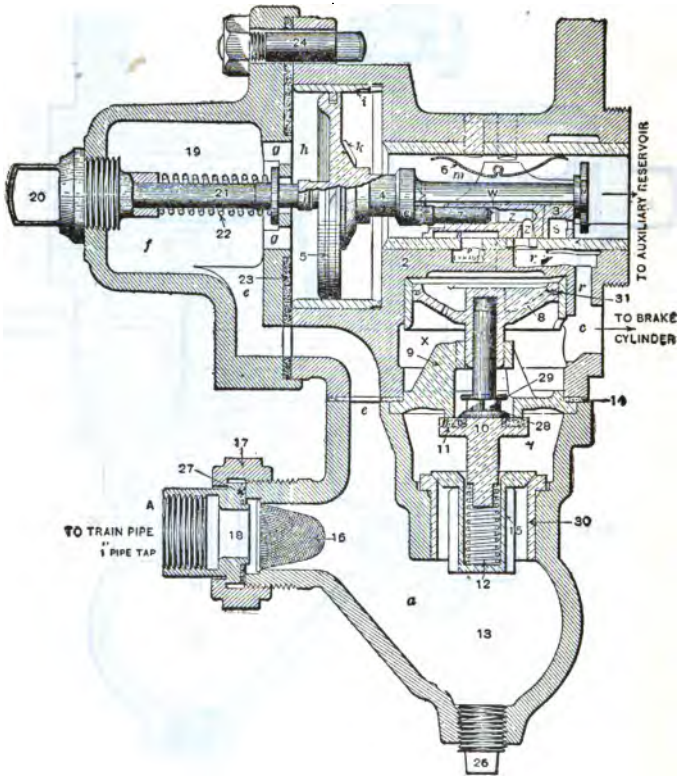

FIG. 6.—QUICK-ACTION TRIPLE VALVE, SERVICE POSITION.

Q. Will these two kinds of triples scattered through a train work together properly in service?

A. Perfectly.

Digitized by Google

Q. Name the different parts of the quick-action triple not found in the plain triple.

A. The strainer 16 (Fig. 5). The additional port

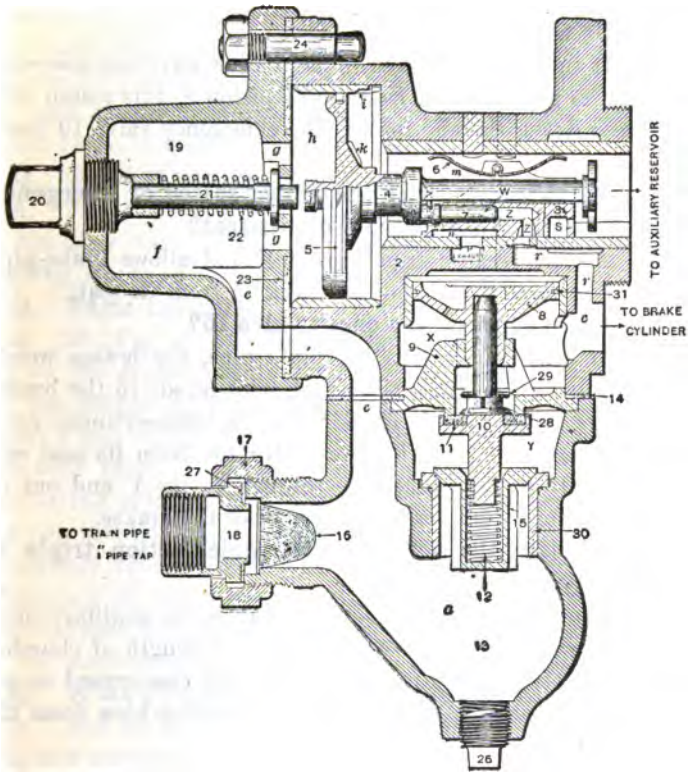

FIG. 7.—QUICK-ACTION TRIPLE VALVE, LAP POSITION.

s in the slide valve and the removed corner of the slide valve shown in Fig. 10. 8 is the emergency piston. 10 is the emergency or, as it is more commonly called, the rubber-seated

Digitized by Google

valve. 15 is called the brake-pipe check, also the emergency check.

Q. Of what use is the strainer 16, Fig. 5 ?

A. Strainer 16 is to keep dirt from getting into the triple in such a way as to close the small feed ports *i* and *k*.

Q. Of what use is piston 8?

A. If the triple is moved so as to allow auxiliary-reservoir pressure to get into port *t* on top of piston 8, this piston will be forced down, thereby forcing the emergency valve 10 from its seat.

Q. What is done when the rubber-seated or emergency Valve 10 (Fig. 8) is forced from its seat?

A. All air escapes from cavity *Y* and allows brake-pipe pressure to force the brake-pipe check 15 from its seat.

Q. Of what use is the check valve 15?

A. If a hose breaks in the brake-pipe, the brakes would fully apply on the whole train and, with no air in the brake-pipe, were it not for the check valve 15, brake-cylinder pressure coming in at *c* would force valve 10 from its seat and pass directly to the brake-pipe through cavity *Y* and out of the broken or parted hose releasing all of the brakes.

Q. Explain the action of the quick-action triple in emergency.

A. A quick brake-pipe reduction causes the auxiliary pressure to force the triple piston out the full length of chamber *h* (Fig. 8), the graduating spring 22 being compressed on account of its inability to withstand the sudden blow from the triple piston.

With the triple piston in the extreme position to the left, or that of emergency, port *s* of the slide valve is in front of port *r*, thus establishing a connection between the auxiliary and brake cylinder. At the same time the removed corner of the slide valve, shown in Fig. 10, is in front of port *t* leading to the top of the emergency piston 8. The auxiliary pressure

forcing piston 8 down unseats the emergency valve 10. This valve being unseated allows all pressure to escape from cavity *Y*. With no pressure in cavity *Y* to hold the brake-pipe check to its seat, the brake-pipe pressure under the check raises it and passes into cavity *Y* over seat of valve 10 to cavity *X* and out at *c* into the brake cylinder; at the same time the auxiliary pressure is entering the cylinder through port *r*. As soon as the pressures equalize, piston 8, valve 10, and check 15 go to their normal positions.

Q. Of what use are Figs. 9 and 10?

A. Fig. 10 gives a better idea of the location of the ports in the slide valve; Fig. 9, the location of the ports in the bushing inside of which the slide valve works.

Q. Name the parts.

A. 26 (Fig. 5) is the drain plug; 16, the brake-pipe strainer; 20, the graduating nut; 21, the graduating stem or post; 22, the graduating spring; 4, the triple piston; *j*, the piston stem; *i* and *k*, the feed ports; 6, the slide-valve spring; 3, the slide valve; 7, the graduating valve; *w*, the service or graduating port; *n*, the exhaust port; *s*, the emergency port; *z*, a continuation of the service port *w*; 15, the brake-pipe or emergency check; 12, the brake-pipe check spring; 10, the emergency or rubber-seated valve; 8, the emergency piston. The exhaust port *p* leads around outside the brass bushing to the atmosphere as shown in Fig. 9 by the dotted lines.

Q. What views do Figs. 5 to 8 represent?

A. The triple valve in its four positions: release, service, lap, and emergency positions.

Q. We have seen that with the quick-action triple the brakes are set harder in emergency. Are brakes set in emergency any harder to release?

A. They are with quick-action triples only.

Q. Why?

Digitized by Google

A. With the quick-action triples air from the brake-pipe

helps set the brakes in emergency, and the pressures equalize higher; therefore the brake-pipe pressure must be made higher to overcome the auxiliary-reservoir pressure and force the

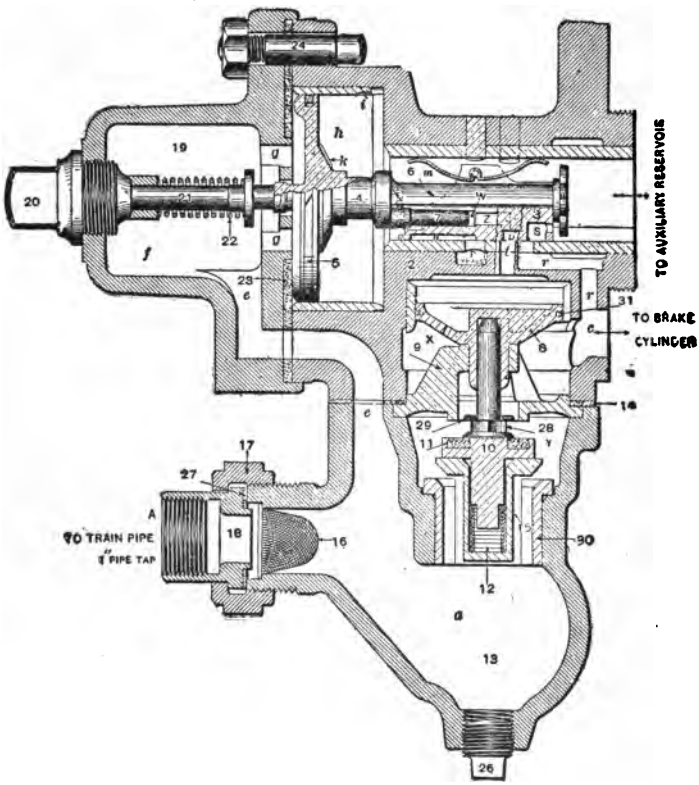

FIG. 8.—QUICK-ACTION TRIPLE VALVE, EMERGENCY POSITION.

triple piston to release position. With the plain triple the pressures equalize at the same pressure as in service.

Q. In Fig. 5 a packing ring 31 is shown in the emerg-

ency piston. Is this ring found in all quick-action triple valves?

A. It is in all modern passenger triples but not in freight valves. The small port in piston 8 is also found in passenger valves only.

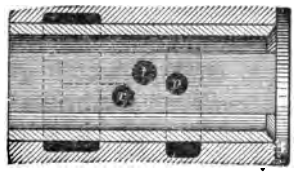

FIG. 9.—SLIDE VALVE BUSHING.

Q. After a partial service application has been made, can we get the quick-action?

A. This depends on the amount of reduction that has been made in service and upon the piston travel. In no case can we gain as much after making even a small service reduction as we could if the sudden reduction were made when the auxiliary-reservoirs were fully charged and the brakes released.

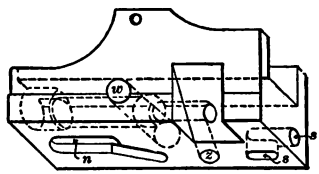

FIG. 10.—SLIDE VALVE.

After a light reduction a gain over the pressure obtained in full service can be made by going to emergency position if the piston travel is a fair length, but not with short travel.

By using the emergency after a partial service applica-

tion, even we made no gain of pressure, we would get the full service more quickly.

Q. How quick must a reduction be made in the brake pipe to throw a triple into quick-action?

A. Faster than the auxiliary-reservoir pressure can get to the brake cylinder through the service port in the slide valve. In this case the graduating spring will not hold the triple piston from traveling full stroke.

Q. When a triple is thrown into quick-action which pressure, auxiliary reservoir or brake pipe, reaches the brake cylinder first?

A. Just a flash of auxiliary-reservoir pressure reaches the cylinder as the service port in the slide valve passes the port leading to the cylinder, but the air from the brake-pipe reaches the cylinder first in any considerable volume, as the corner cut off from the slide valve allows the auxiliary-reservoir pressure to strike piston 8 and force the rubber-seated valve 10 from its seat before port *s* comes in front of port *r*.

Q. Why is port s (Figs. 8 and 10), used in emergency, made smaller than port z, used in service, to let auxiliary reservoir pressure into the brake cylinder?

A. So as to hold the auxiliary-reservoir pressure back in emergency and allow as much air as possible to enter the brake cylinder from the brake-pipe.

PECULIARITIES AND TROUBLES OF THE QUICK-ACTION TRIPLE VALVE.

From what follows it may seem that a triple will get out of order under the slightest provocation. This, however, is not true; it is a constant source of wonder to see the fine action of triple valves which have little or poor care. A triple needs

no more care than any other piece of mechanism to keep it doing first-class work. The aim of what follows is to bring out its possibilities.

Q. What could wholly or partially stop the charging of an auxiliary reservoir?

A. The strainer in the brake-pipe where the cross-over pipe leading to the triple joins the main brake-pipe, or the strainer 16 in the triple (Fig. 5) being filled with dirt, scale, cinders or oil. Port *i* or *k* might be plugged, the triple might be cut out, or there might be a leak in the auxiliary-reservoir which let the air out as fast as it came in.

Q. If all auxiliary reservoirs did not charge equally fast, what would be the effect?

A. If we wished to apply the brakes very soon, the ones with the auxiliary-reservoirs not fully charged would not respond to the first reduction if light.

Q. Occasionally after coupling up the hose in a train it is found that the brake on a car will not apply in response to a reduction of brake-pipe pressure. What might be the trouble other than those just described?

A. It sometimes happens that the switch crew is responsible for such an occurrence. Sometimes when an air train is brought into a yard and the yard crew is in a hurry to "drill" the train with an engine not equipped with air, they do not always bleed the train in the proper manner. Instead of opening an angle cock and then bleeding all the reservoirs by hand, they put a piece of coal or wood under an arm of the auxiliary-reservoir release valve to do the work of holding the valve from its seat. In this way they save time for themselves but are a source of considerable bother to the ones who inspect the train. On account of the air escaping through a comparatively large port, the leakage is not always detected without a careful examination.

Digitized by Google

Q. Will any other trouble result from the strainers being corroded or dirty?

A. Yes; we might not be able to make a sufficiently quick reduction on the triple piston to get quick-action.

Q. One triple going into quick-action makes a sudden brake-pipe reduction which starts the next triple, and that one the next, and so on throughout the train. If five or six cars together in the train were cut out, or had plain triples, or very dirty strainers, would the triples back of these go into quick-action when the engineer made a sudden reduction?

A. No, on account of the resistance of friction to the passage of the sudden reduction through the six car lengths of pipe. The friction gradually destroys the suddenness of the reduction, and there is only a slight and gradual reduction, in the brake-pipe back of the cars cut out.

Q. What bad effect would follow if the engineer did not continue making a reduction?

A. The air coming ahead from the back of the train would release the head brakes.

Q. Could these brakes in the back of the train be applied?

A. Yes, in service but not in emergency.

Q. Water sometimes collects in cavity 13 (Fig. 5) of the triple. Where does it come from?

A. It comes into the brake-pipe as vapor in the air, and condenses whenever a sudden drop in brake-pipe pressure occurs.

Q. What bad effect will water have in this place?

A. It is likely to freeze in winter and block the flow of air through the triple.

Q. What should be done in such a case?

A. Apply burning waste and when thawed remove the

Digitized by Google

drain plug 26 to remove the water or the trouble will recur.

Q. What would be the effect of a weak or broken graduating spring?

A. We would have nothing to stop the triple piston when it reached service position, and it would move on to emergency position.

Q. If one triple goes into quick-action, will the rest go?

A. Yes, as a sudden reduction is made on the brake-pipe through the emergency ports of the triple in this case. This sudden reduction starts the next and that the next and so on.

Q. Will a weak or broken graduating spring always throw the triples into quick-action?

A. No, only on a short train.

Q. Why not on a long train?

A. On a short train, with a gradual brake-pipe reduction, air is drawn from the brake-pipe faster than the auxiliary reservoir pressure can get to the brake cylinder through the service port of the slide valve. When the auxiliary-reservoir pressure is enough greater than that in the brake-pipe, it forces the triple piston to emergency position, as there is no graduating spring to stop it.

On a long train, it takes longer to make a corresponding reduction on account of the larger volume of air in the brake-pipe. This gives the auxiliary-reservoir pressure longer to pass into the cylinder, and as a result the brake-pipe and auxiliary-reservoir pressures keep about equal and the triple piston will not move to emergency position unless a sudden reduction is made.

Q. How many air cars must there be in a train so that a broken or weak graduating spring will not affect the service application?

A. Usually not less than six or seven; with more than this number, if otherwise the triples work properly, the grad-

Digitized by Google

uating springs could be removed from all triples and no bad effect be noticed.

Q. What two things will cause the triples to go into quick-action regardless of the length of the train?

A. A sticky triple or a broken graduating-valve pin. (The one which fastens the graduating valve to the piston stem as shown by the dotted lines, Fig. 5.)

Q. Why will a sticky triple throw the brakes into emergency?

A. Because the triple does not respond to a light reduction. When it does move it jumps, and the sudden blow compresses the graduating spring and the triple is in the quick-action position. This car starts the rest as before explained.

Q. Why will a broken graduating pin throw the brakes into emergency?

A. Because with this pin broken there is nothing to move the graduating valve from its seat when the triple piston moves and the auxiliary-reservoir pressure is acting to hold it on its seat. When a brake-pipe reduction is made and the triple assumes service position, no air can leave the auxiliary-reservoir and pass through the graduating or service port of the slide valve, as the graduating valve is on its seat. When sufficient brake-pipe reduction has been made so that the graduating spring cannot withstand the auxiliary-reservoir pressure acting on the piston, the triple goes to the quick-action position, and we get the quick-action on this car and consequently on the rest as before explained.

Q. Which of these three troubles—weak graduating spring, broken graduating pin or sticky triple—will usually be found to exist if the brakes go into emergency with a service reduction?

A. A sticky triple, and this usually means that the triple causing the trouble has had poor care.

Digitized by Google

Q. Shall we get the same result regardless of the location of the faulty triple in the train?

A. Yes; if one starts, all do.

Q. What is the probable trouble with a brake which, when set in service, will sometimes remain set and sometimes release?

A. A dirty slide valve which sometimes seats properly and at others not; in the latter case auxiliary-reservoir pressure escapes to the atmosphere through the exhaust port and allows brake-pipe pressure to force this triple to release position.

Q. How may this defect be remedied?

A. Remove the triple piston and attached parts, clean carefully, loosen the packing ring without removing and rub a little oil on the slide valve with the finger.

Q. Why not pour on the oil?

A. Too much oil is bad, as it collects dust, which with the oil forms gum. This causes a triple to stick.

Q. What effect will a moderate leak in the brake pipe have if the brakes are not set?

A. It will simply cause the pump extra work to supply it.

Q. What effect if the brakes are set?

A. It will cause them to apply harder.

Q. Will the leak cause only the brake on that car to leak on, or all?

A. All, as the brake-pipe is continuous through the train.

Q. What effect will a leak in an auxiliary reservoir have if a brake is released?

A. It will keep the pump at work the same as a brake-pipe leak.

Q. What effect if the brakes are applied?

A. It will leak the brake off on the car where the leak is and, then, drawing air from the brake-pipe through the feed ports, it will gradually set the other brakes tighter.

Digitized by Google

Q. There are a number of leaks in the triple which will cause a blow at its exhaust port. Name the two most likely to produce this effect.

A. A leaky slide valve or a leaky rubber-seated valve (Fig. 5).

Q. How can we tell which of these is causing the trouble?

A. As the exhaust port in the slide-valve seat is always in communication with the atmosphere, whether the brakes are applied or released, a leak by the face of the slide valve will cause a constant blow.

Q. How else can we tell if it is the slide valve that causes the trouble?

A. Apply the brake, and if auxiliary-reservoir pressure is leaking away under the slide valve, the brake will generally release.

Q. How can we tell if the trouble is with the rubber-seated valve?

A. The rubber-seated valve will cause a blow at the exhaust only when the brake is released.

Q. Why?

A. The rubber-seated valve 10 (Fig. 5) leaking will allow the pressure to leave cavity *Y*. The brake-pipe pressure then raises check 15 and passes through cavity *Y* past the rubber-seated valve, through cavity *x*, ports *c* and *r*, into the exhaust cavity *n* of the slide valve and out to the atmosphere through port *p*. When the brake is applied, port *n* in the slide valve is closed to port *r*, consequently the blow stops.

Q. Where does the air which is leaking past the rubber-seated valve go after the brake is applied?

A. Direct to the brake cylinder through *c*, and this brake continues to set harder.

Digitized by Google

Q. Why is a leaky rubber-seated valve more likely to slide the wheels on a car in a long train than in a short one?

A. After the brakes are applied, this leak allows the brake-pipe and brake-cylinder pressures to equalize. With a long brake-pipe there is a much greater volume of air, and these pressures will equalize higher.

Q. How else can we tell if the rubber-seated valve leaks?

A. Turn the cut-out cock in the cross-over pipe from the brake-pipe to the triple after everything is charged: if the rubber-seated valve leaks, it will draw air from the brake-pipe; with the cut-out cock closed, this leak is not being supplied, and the reduction will cause the brake on this car to apply.

Q. Give another symptom which indicates a leaky rubber-seated valve.

A. The leak above the check 15 caused the check to rise to supply it, and when the cavity is again charged the check closes. It sometimes rises and closes so fast as to make a loud buzzing sound.

Q. What is usually the cause of leaking in a rubber-seated valve?

A. Dirt on the seat, a poor seat caused by wear, the use of oil on the quick-action part of the triple, or using too much oil in the brake cylinder, which will work into the triple and cause the rubber to decay.

Q. If dirt is the source of the trouble, how may it be removed without taking the triple apart?

A. Set the brake by opening the angle cock after closing the cock at the other end of the car. If there is dirt on the valve, it may be blown off in this way.

Digitized by Google

Q. What besides the slide and rubber-seated valves will cause a blow at the exhaust port of the triple?

A. Gasket 14 (Fig. 5) leaking between *e* and cavity *X*, or the gasket leaking between the brake cylinder and auxiliary-reservoir where the triple is bolted to the cylinder. On freight equipments there is a pipe which runs inside the auxiliary to the brake cylinder; this pipe leaking will also cause a blow.

Q. Are these leaks common?

A. On the contrary they are very uncommon. The blow is almost invariably due to a leaky slide or emergency valve.

Q. What effect would the leaking of graduating valve 7 (Fig. 5) have?

A. The action produced by such a leak is uncertain, and depends greatly on the conditions connected with it. When the brake is applied, the triple assumes lap position after the auxiliary-reservoir pressure is a trifle less than that in the brake-pipe. If the graduating valve leaks, the auxiliary-reservoir pressure gradually reduces, and the brake-pipe pressure forces the triple piston and slide valve back until the blank on the face of the slide valve between ports *z* and *n* is in front of port *r*. If the graduating valve does leak, no more air can leave port *z* in this position, and the slide valve stops. This blank space is only a trifle wider than port *r*, so if the valve is in good condition and works smoothly, the brake should not release; but if it works hard, it is likely to jump a little when it moves, and open the exhaust port.

Q. Give a rule by which to tell how a leaky graduating valve will act.

A. If the triple is in proper condition, a leaky graduating valve should not release a brake. If the triple is a trifle sticky, a brake is likely to be released. A leaky slide valve or a slight auxiliary-reservoir leak in combination with a leaking

Digitized by Google

graduating valve will release a brake. The action also depends upon the condition of the triple-piston packing ring which if comparatively loose will permit brake-pipe pressure to feed into the auxiliary-reservoir as fast as its pressure escapes. If brake-pipe and auxiliary-reservoir pressures remain equal, the triple piston is not affected, and the leakage by the graduating valve would not release the brake.

THE TYPE "K" TRIPLE VALVE.

Q. What does Fig. 11 illustrate?

A. Fig. 11 illustrates the improved *K* triple valve which is now superseding the former quick-action triple valve in freight service.

Q. Does this triple valve differ any in principle of operation from the old standard valve?

A. No; it operates on the same principle, that is, a reduction of brake-pipe pressure causes the brake to apply and an increase of brake-pipe pressure causes it to release.

Q. What are the important advantages of the improved valve over the old?

A. With the improved valve a portion of the brake-pipe air is vented to the brake cylinder in each service application; this causes a quicker fall of pressure in the brake-pipe throughout the train and hence a quicker serial application of the brakes than is now obtained with the older form of triple. In the release of the brakes on long trains those on the front portion may be held applied until those in the rear have been released; this action causes the slack to settle in instead of stretching out, which latter action tends to break the train in two. There is also a uniform recharge feature by means of which the recharge at the head end is slowed up. This makes available a greater amount of air with which

Digitized by Google

to release and recharge the brakes at the rear of the train; it also does away with the overcharge of the auxiliary reservoirs at the front of the train, which overcharge usually results in the reapplication of the brakes near the engine when the brake valve handle is moved to running position. The reapplication wastes air and overheats wheels because of extra amount of work performed.

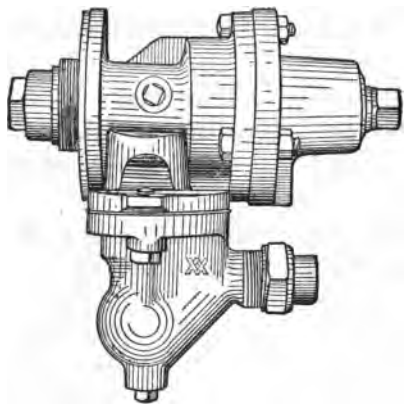

FIG. 11.—K TRIPLE VALVE—EXTERIOR VIEW.

Q. What other advantages are obtained with the K triple?

A. There is a large saving in the quantity of air used which results in less pump labor, the brakes apply more uniformly and with greater certainty on the longest trains and with any service reduction desired. In heavy grade work there is much less chance for the engineer to "lose his air" and of the train running away in consequence.

Q. In the emergency application of the brake is there any advantage of the new triple valve over the old?

A. The emergency feature of the triple has not been

Digitized by Google

changed and the results that can be obtained with the valves are practically identical.

Q. In service application using a brake-pipe pressure of 70 pounds, how much reduction is necessary to set the brakes in full?

A. About 17 pounds, 3 pounds less than with the standard triple.

Q. Will these triples give satisfactory results in braking when intermingled in any considerable number with the older triples?

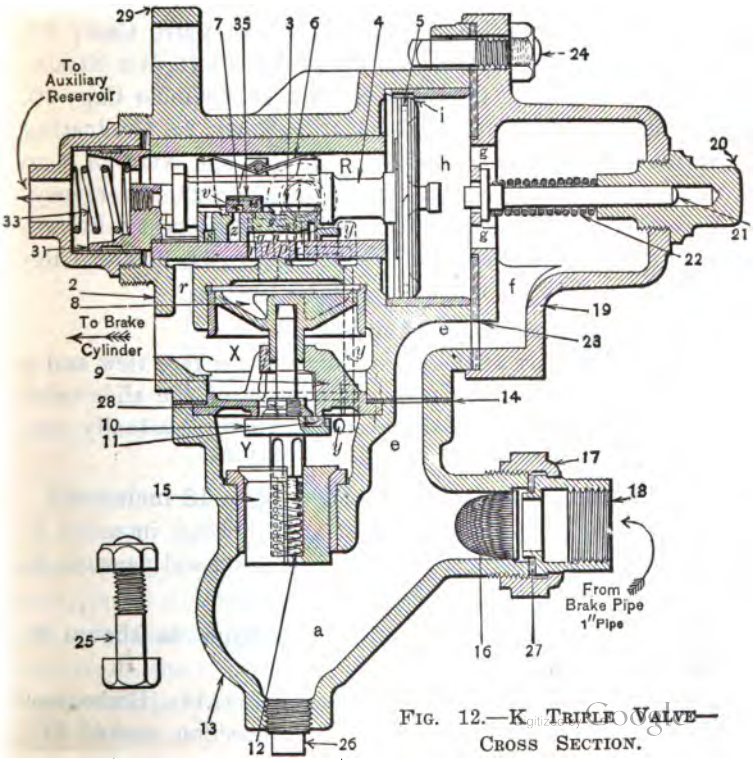

FIG. 12.—K TRIPLE VALVE—CROSS SECTION.

Digitized by Google

A. Yes, and on long trains they will very materially improve the action of the older triple.

Q. What does Fig. 12 represent?

A. It is a vertical cross section of the *K* triple representing the interior construction.

Q. What are the names of the different parts of the K triple as numbered on this cut?

A. 2, Valve Body; 3, Slide Valve; 4, Main Piston; 5, Main-Piston Packing Ring; 6, Slide-Valve Spring; 7, Graduating Valve; 8, Emergency Piston; 9, Emergency-Valve Seat; 10, Emergency Valve; 11, Emergency-Valve Rubber Seat; 12, Check-Valve Spring; 13, Check-Valve Case; 14, Check-Valve Case Gasket; 15, Check Valve; 16, Air Strainer; 17, Union Nut; 18, Union Swivel; 19, Cylinder Cap; 20, Graduating Stem-Nut; 21, Graduating Stem; 22, Graduating Spring; 3, Cylinder-Cap Gasket; 24, Bolt and Nut; 25, Cap Screw; 26, Drain Plug; 27, Union Gasket; 28, Emergency-Valve Nut; 29, Retarded-Release Stem; 32, Retarded-Release Spring Collar; 33, Retarded-Release Spring; 34, Retarded-Release Stem Pin; 35, Graduating-Valve Spring.

Q. What is represented in Fig. 13?

A. A face view of the graduating valve, a face view and a top view of the slide valve, and a view of the slide-valve bush, with their ports, cavities, etc., arranged as actually constructed.

Q. What is represented in Figs. 14 to 18 inclusive?

A. These figures are diagrammatic drawings intended to show clearly the relation of the various ports and passages in the different operative positions of the valve.

Q. Explain the operation of the triple as shown in Fig. 14.

A. Full release position is shown in Fig. 14. Brake-pipe air enters the triple-valve body at the connection marked *BP*,

Digitized by Google

passes upward through passage, *a*, *e*, *f* and *g* to chamber *h*, thence through the feed groove *i* past the triple piston into chamber *R* and out to the auxiliary reservoir. Brake-pipe air also flows past the non-return check valve, from chamber

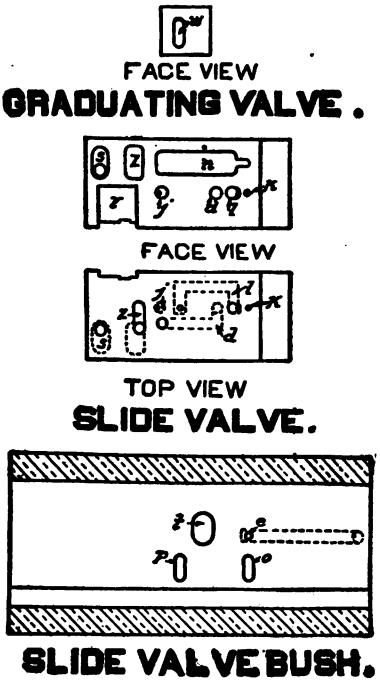

FIG. 13.—K TRIPLE VALVE.

a into chamber *Y*, thence through passage *y* in the body and port *j* in the slide valve to chamber *R* and the auxiliary reservoir. In this way the auxiliary reservoir is charged up to the pressure in the brake pipe. The slide valve is shown in this figure with its exhaust cavity *n* uncovering wide the exhaust

Digitized by Google

port in the slide-valve seat leading from the brake cylinder to the atmosphere, providing for the release of the brake through port *r*, cavity *n*, and port *p*.

Q. What is shown in Fig. 15?

A. In this figure, the parts of the *K* triple are represented in the service position, the position they assume while a service reduction in brake-pipe pressure is being made.

Q. Explain the operation in service position.

A. The triple piston, as shown, has moved toward the

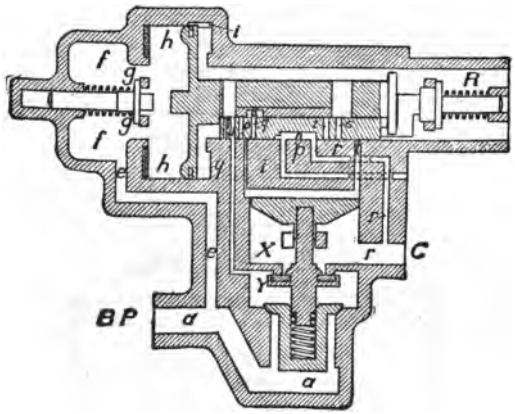

FIG. 14.—K TRIPLE VALVE—FULL RELEASE.

left until it touches the graduating stem, and it has carried with it the main slide and the graduating slide valves. Port *z* in the main slide valve registers with port *r* in its seat. Port *z* is uncovered by the graduating valve so that air is free to flow from the auxiliary reservoir to the brake cylinder. At the same time passage *y* and port *o* are in register, and cavity *v* in the graduating valve spans port *o* and *q*. Port *q* is in register with port *t* leading around the loosely fitting piston to chamber *x* and the brake cylinder. Hence, arranged as shown,

these ports permit brake-pipe air to flow into the brake cylinder at the same time that the auxiliary reservoir is supplying air.

Q. What does Fig. 16 represent?

A. It shows the triple valve in what is termed the Service-Lap position.

Q. When does the triple valve assume this position?

A. When the pressure in the auxiliary reservoir falls

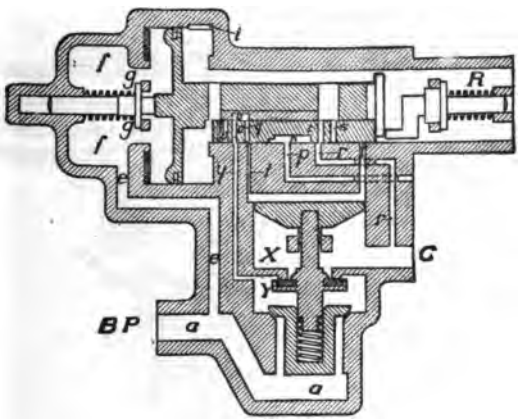

FIG. 15.—K TRIPLE VALVE—SERVICE POSITION.

slightly below that remaining in the brake pipe. As shown in this figure the triple-valve piston has moved the graduating valve back far enough to close ports *o*, *q*, and *z*, and thus prevent further flow of air from both the auxiliary reservoir and the brake pipe to the cylinder. It will be noted in the figure that the main slide valve is ahead of its position shown in Fig. 15. The valve would only assume this position if the brake-pipe pressure were reduced faster than the auxiliary-reservoir pressure could reduce to the brake cylinder,

otherwise port *o* would remain in register with port *y* as in Fig. 15 but the graduating valve would have closed ports *o* and *z* as shown in Fig. 16.

Q. What is shown in Fig. 17?

A. Fig. 17 represents the different parts of the *K* triple in the Retarded-Release position.

Q. How are they made to assume this position?

A. By admitting main-reservoir air to the brake pipe fast

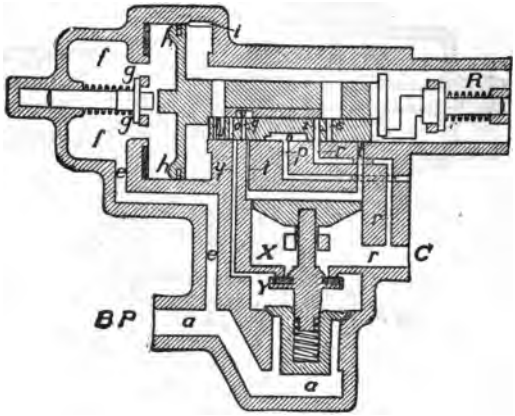

FIG. 16.—K TRIPLE VALVE—SERVICE-LAP POSITION.

enough to increase the pressure considerably above that remaining in the auxiliary reservoir.

Q. Explain the operation in the retarded release position.

A. As shown brake-pipe pressure forces the triple piston to the extreme right until it strikes against the slide-valve bush. When this occurs brake-pipe air feeds only through charging groove *i* and the small port *l* in the end of the slide-valve bush to reach the auxiliary reservoir.

Digitized by Google

The triple-piston stem abuts against the retarded-release spring and partially compresses it. The slide valve has moved far enough over to bring the restricted port *n* (Fig. 13), the exhaust cavity, over exhaust port *p*, thus reducing very materially the size of this port, causing a slow release of the brake. In a long train this retarded release can, if desired, be obtained about 30 cars back in the train.

Q. What is it that causes the triple piston to assume the retarded-release position?

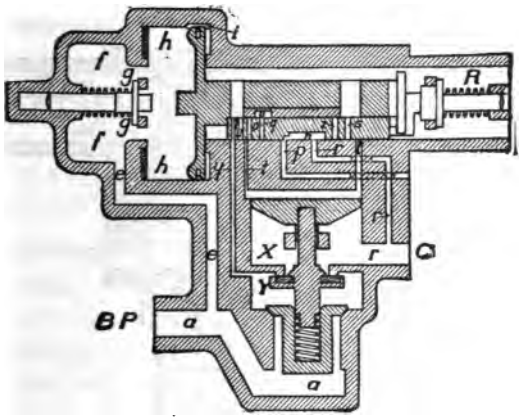

FIG. 17.—K TRIPLE VALVE—RETARDED RELEASE POSITION.

A. To cause the piston to assume this position it is necessary to have the pressure on the brake-pipe side of the triple piston sufficiently in excess of that in the auxiliary reservoir to permit of the greater pressure acting on the brake-pipe side of the piston to compress the retarded-release spring. With the usual main-reservoir pressure and capacity, it is possible to compress this spring on a long train about thirty cars back. The effect of the friction due to the flow of air is to prohibit any rapid rise of brake-pipe pressure back in

Digitized by Google

the train but, as already stated, the desired differential between the brake pipe and auxiliary-reservoir pressure can be obtained about thirty cars back in a 100-car train.

Q. What does Fig. 18 represent?

A. It represents the *K* triple in the Emergency position.

Q. When does the valve assume this position?

A. Whenever a heavy, quick reduction in brake-pipe pressure is made, as when the brake valve is quickly placed in emergency position or a hose bursts.

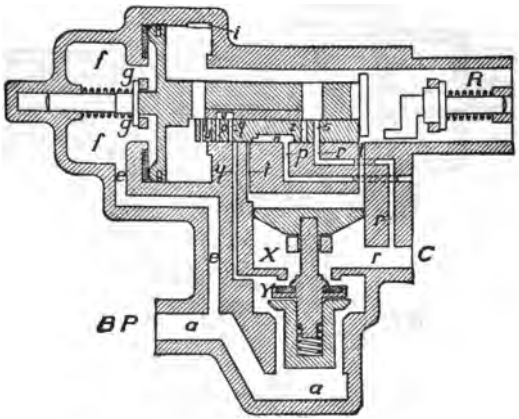

FIG. 18.—K TRIPLE VALVE—EMERGENCY POSITION.

Q. Explain the operation in emergency position.

A. It is the same as that given for the standard triple. Air is admitted to the top of the emergency piston through the large port *t*. This piston is forced downward, and brake-pipe pressure raises the non-return check valve, and flows quickly through ports *r* and *C* to the brake cylinder. At the same time port *s* in the slide valve registers with port *r* so that auxiliary-reservoir air can flow through this port also to the brake cylinder and will equalize with it.

Digitized by Google

Q. How many sizes of the K triple are there?

A. Two, the *K*-1 and *K*-2.

Q. On what size car equipment is the K-1 triple used? The K-2?

A. The *K*-1 is used on eight-inch freight equipment, and the *K*-2 on ten-inch.

Q. Can a K-1 and a K-2 triple be readily substituted for the older corresponding size of quick-action triple?

A. Yes, they are perfectly interchangeable on their respective reservoirs.

Q. On a train of eighty cars will a five-pound service reduction set all the brakes?

A. Yes, and a 5-pound reduction will be as effective in stopping an empty train from a speed of 20 miles per hour as a 20-pound service reduction with the older triples.

Q. Explain this.

A. Because of the venting of brake-pipe air to the brake cylinder, a five-pound initial reduction insures the aplication of all brakes on the train in a much shorter time than they can be applied with any service reduction with the older triples, and also with a higher pressure than can be obtained from a 5-pound service reduction with the ordinary quick-action triple valve with which on this length of train only a comparatively few brakes will apply.

Q. Is there any difference in the internal construction of the K-1 and the K-2 triples?

A. In full release position, the charging takes place through the feed port *i* only with the K-1 triple while the feed port *i* in the piston bush and port *j* in the slide valve are both used with the K-2 valve. Port *j* does not exist in the K-1 triple.

Digitized by Google

Q. As to care and maintenance of the K triple, do the same rules apply as to the old standard triple?

A. Yes.

THE TYPE "L" TRIPLE VALVE.

Q. What valve is illustrated in Figs. 19 and 20?

A. The Type L Triple Valve.

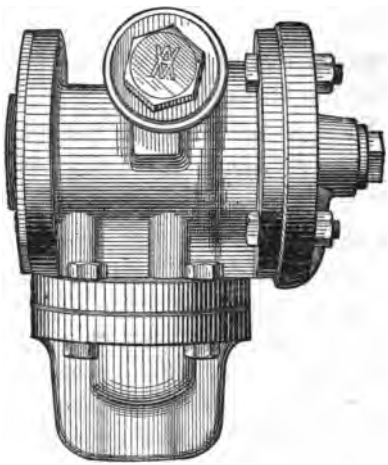

FIG. 19.—"L" TRIPLE VALVE.

Q. What kind of a triple valve is it, and in what service is it used?

A. It is a new type of Quick-Action Triple Valve for use in High-Speed Passenger Service.

Q. What feature does it have not found in the old standard quick-action triple valve already described?

A. It has the Graduated Release, by means of which the

Digitized by Google

brakes in the train can be partially released when desired; (2) it has the Quick-Service, by means of which service applications are obtained throughout long trains in much less time than with the old standard triple; (3) it has the Quick-Recharge, by means of which the auxiliary reservoirs are recharged during release of the brakes in the same time as the air can exhaust from the brake cylinder; (4) it obtains a much

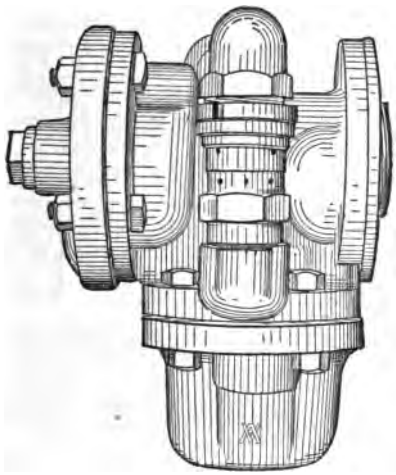

FIG. 20.—"L" TRIPLE VALVE.

higher brake-cylinder pressure in emergency than with the old standard-triple valve.

Q. Are the high-speed reducing valves used in connection with the L Triple Valve?

A. No; they are unnecessary, as the L triple performs all the duties of a triple valve and high-speed reducing valve combined. The safety valve, which is a part of the triple valve, takes the place of the high-speed reducing valve.

Digitized by Google

Q. Is any additional apparatus required when the L Triple Valve is substituted for the old standard?

A. Yes, a "supplementary" reservoir, about twice the size of an auxiliary reservoir, is required.

Q. What is the purpose of the supplementary reservoir?

A. It furnishes the means of obtaining the graduated re-

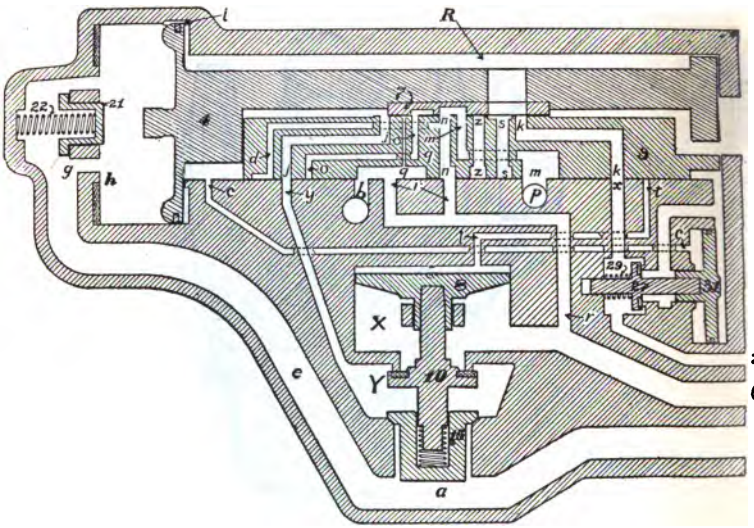

FIG. 21.—DIAGRAM OF TYPE L TRIPLE VALVE RELEASE AND CHARGING POSITION.

lease, quick-recharge, and the high-emergency brake-cylinder pressure.

Q. Is any other change of apparatus required when substituting the L Triple Valve?

A. The brake-cylinder pressure head must be exchanged for one having all pipe connections made in it, as the L Triple is of the "pipeless" type.

Digitized by Google

Q. What is the advantage of a "pipeless" triple valve?

A. As all pipe connections are made to the cylinder pressure head, and communicate with the triple valve through suitable ports in the head and triple-valve body, the triple valve may be removed for inspection and repairs without breaking any pipe joints.

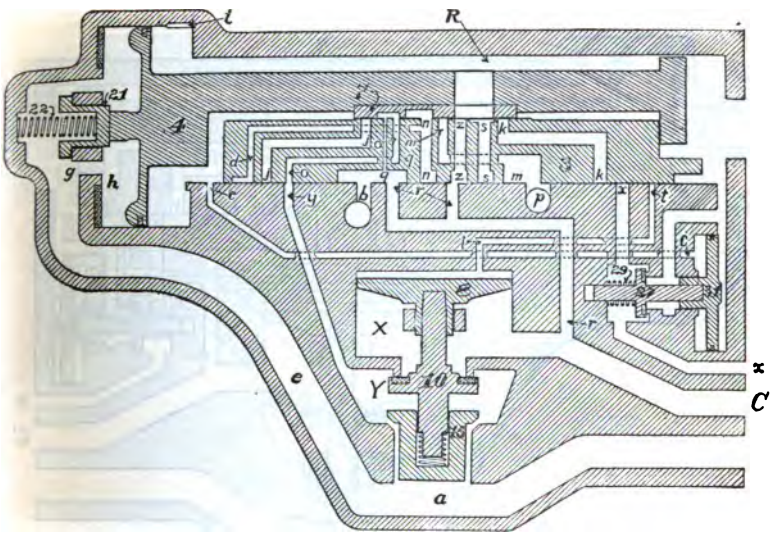

FIG. 22.—DIAGRAM OF TYPE L TRIPLE VALVE. QUICK-SERVICE POSITION.

Q. How does the outside appearance of the L Triple differ from the old standard?

A. There is a "vent-valve" portion which lies across the top of the body at right angles to the movement of the slide-valve; and a safety valve is attached vertically to one side. Also, there is no connection for pipes on the valve.

Q. What are Figs. 21 to 26.

A. They are diagrams of the L Triple Valve in different

Google

positions, with the parts so arranged as to show all the parts in one plane without regard to the actual construction of the valve.

Q. Name the connections to the triple valve.

A. Referring to Fig. 21, the brake pipe connects with passage *a;* passage *C* connects with the brake cylinder; port

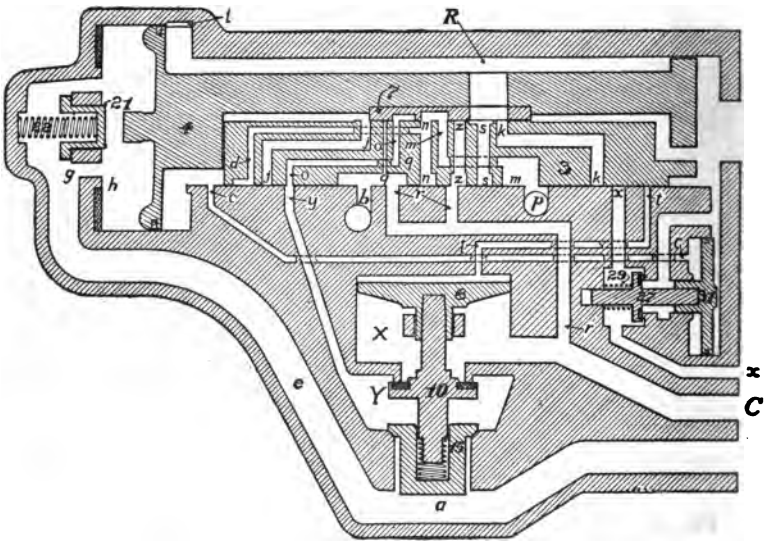

FIG. 23.—DIAGRAM OF TYPE L TRIPLE VALVE. SERVICE-LAP POSITION.

x connects with the supplementary reservoir; the slide valve cavity *R* is always connected to the auxiliary reservoir.

Q. How is the passenger car brake charged up at starting?

A. Air flows through the brake pipe from the locomotive and enters the triple valve by passage *a, e* and *g* to cylinder *h,* and through the feed groove *i* to chamber *R* and the auxiliary

reservoir; the air also lifts check valve 15 and enters chamber Y, thence through port y in the seat and j in the slide valve, it flows to chamber R and the auxiliary reservoir; thus the latter is charged by two different channels giving a very prompt rise in the auxiliary-reservoir pressure. At the same time, air flows from chamber R through port k in the slide

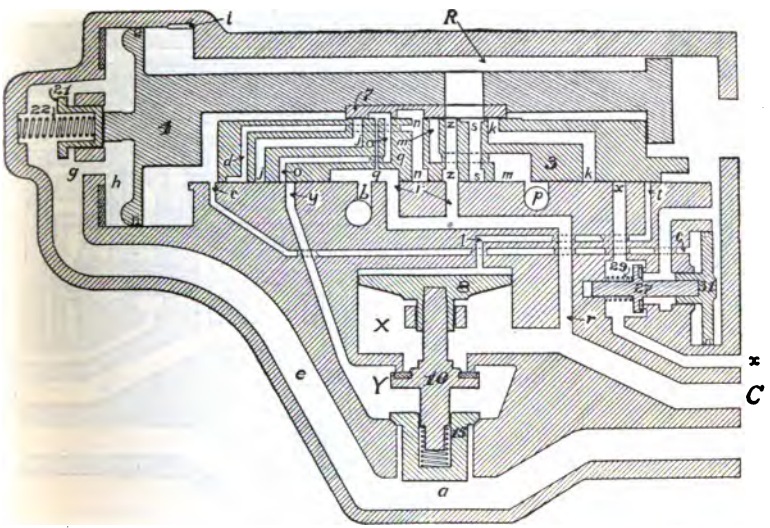

FIG. 24.—DIAGRAM OF TYPE L TRIPLE VALVE. FULL-SERVICE POSITION.

valve and x in the seat to the supplementary reservoir charging it at the same time to the auxiliary-reservoir pressure. The charging continues till both reservoirs and brake pipe are at the same pressure.

Q. What happens in the triple valve when a moderate service reduction takes place?

A. The reduction in brake-pipe pressure in cylinder h allows the higher pressure remaining in the chamber R to force

Digitized by Google

the piston, graduating valve and slide valve to the left (Fig. 22) until the piston strikes the graduating sleeve 21, held in its place by graduating spring 22. Port *y* in the valve seat connects with port *o* in the slide valve, and the latter through a small cavity in the graduating valve. and port in the slide valve with cavity *q*, the latter connecting with port *r* and the

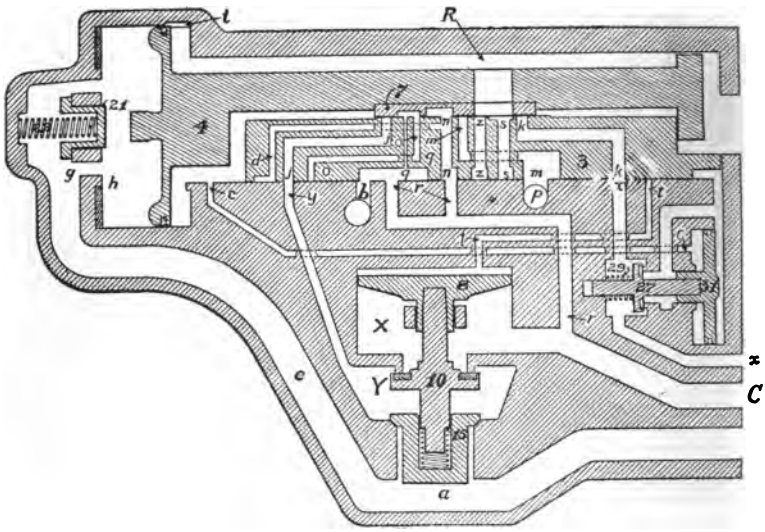

FIG. 25.—DIAGRAM OF TYPE L TRIPLE VALVE. RELEASE-LAP POSITION.

brake cylinder. Consequently brake-pipe air lifts the check valve 15, and flows through cavity *Y*, port *y* and the connections just mentioned to the brake cylinder. Not a large quantity of air, however, flows through this channel, for the reason that port *z* in the slide valve partially registers with port *r* in the seat, allowing auxiliary-reservoir air also to flow to the brake cylinder; and the size of the ports between the auxiliary reservoir and brake cylinder are larger than those

Digitized by Google

between the brake pipe and the brake cylinder, so that the larger amount of air for setting the brakes comes from the auxiliary reservoir. The small amount of air taken from the brake pipe helps to reduce its pressure, so that the reduction passes through the train more rapidly than with the old standard equipment. This is the Quick-Service feature.

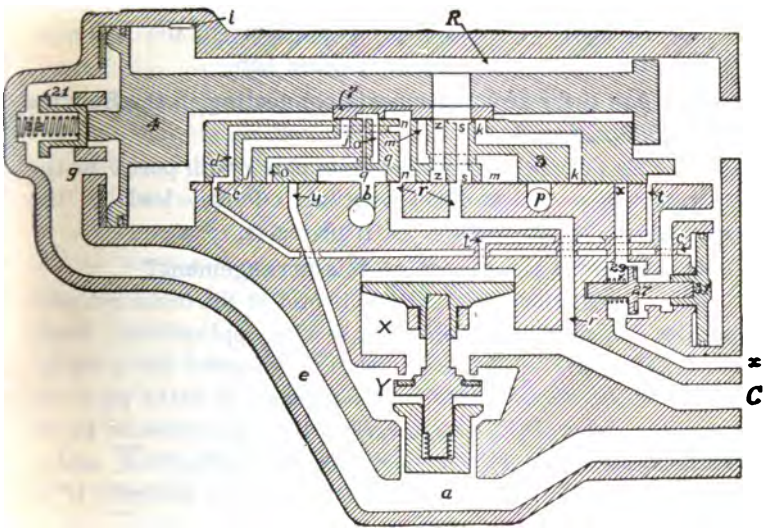

FIG. 26.—DIAGRAM OF TYPE L TRIPLE VALVE. EMERGENCY POSITION.

Q. What is this position called?

A. Quick-service position.

Q. Does the triple valve remain in this position during the brake application?

A. No. As soon as the auxiliary-reservoir pressure falls, by flowing into the brake cylinder, to a point slightly below that remaining in the brake pipe, the piston and graduating valve are forced to the right until the piston strikes the slide

Digitized by Google

valve as shown in Fig. 23. In this position, both port *z* and the small port connecting with cavity *q* are closed by the graduating valve, so that no more air can flow to the brake-cylinder from either the auxiliary reservoir or the brake pipe.

Q. What is this last mentioned position called?

A. Service-Lap Position.

Q. Why SERVICE Lap?

A. Because there are two lap positions in the L Triple Valve; the Service Lap and the Release Lap.

Q. Are there any other ports connecting in the Service or Lap Positions?

A. Yes; cavity *q* always connects port *r* with port *b* in the seat, in all service and lap positions. Port *b* leads to the safety valve on the side of the triple valve.

Q. What is the object of this arrangement?

A. So that the safety valve will protect the brake cylinder against too high pressure in all service applications. Since the triple valve is designed for the high-speed brake equipment, which employs 110-pounds pressure in brake pipe and auxiliary reservoir, it is necessary to limit the pressure in the brake cylinder to 50 pounds in service applications, as the braking power of the car is calculated for this amount; if no safety valve or reducing valve was used, the 110 pounds in the auxiliary reservoir would equalize with the brake cylinder at about 85 pounds, which in the conditions of ordinary service stops, would likely cause the wheels to slide.

Q. Is there any other service position than Quick Service?

A. Yes; Full Service.

Q. When a service reduction is made, what determines whether the triple valve will go to Quick Service or Full Service?

A. The length of the train.

Digitized by Google

Q. How is that?

A. In a short train, the volume of the brake pipe is small, and its pressure will therefore reduce more rapidly than a long train, for the same reduction at the brake valve. Consequently, when a service reduction is made with a short train, the fall of pressure in cylinder *h* of the triple valve, may be rapid enough to allow the piston, when moving to the left, to slightly compress graduating spring 22 when it strikes graduating sleeve 21, as shown in Fig. 24. In this position, port *o* in the slide valve does not register with port *y* in the seat, so that no air flows from the brake pipe to the brake cylinder, except as the ports pass each other; at the same time, port *z* is wide open to port *r*, allowing the auxiliary-reservoir air to flow more rapidly to the brake cylinder, so that its fall in pressure keeps pace with that in the brake pipe. In this way, the triple valve itself automatically cuts out the Quick-Service feature when the brake-pipe reduction is sufficiently rapid without it. The piston and graduating valve go to Service-Lap position after the Full Service, in exactly the same manner as after the Quick Service.

Q. What occurs in the triple valve when the brakes are released?

A. The increase of brake-pipe pressure causes the pressure in cylinder *h* on the left of the piston to increase, forcing piston, slide valve and graduating valve to the position shown in Fig. 21. Port *r* in the seat connects through port *n* in the slide valve, the cavity in the graduating valve, port *m* in the slide valve, with port *p* in the seat, the latter connecting with the exhaust. Thus brake-cylinder pressure can escape to the atmosphere. At the same time the auxiliary reservoir is recharged through the feed groove *i*, and through the quick-recharge ports *y* and *j*. It is also helped to recharge by the volume of air which has been bottled up in the supplementary reservoir during the service application, which now connects

Digitized by Google

through ports *x* and *k* with chamber *R*. In this way, the recharging of the auxiliary reservoir is accomplished very quickly, and constitutes the Quick-Recharge feature of the triple valve.

Q. What is this position called?

A. Release and Charging position.

Q. How does the triple valve operate when a Graduated Release is desired?

A. Let us assume that the brakes were applied by a 15-pound reduction, or that brake-pipe pressure was reduced from 110 to 95 pounds. Referring to Fig. 23, Service-Lap position; the pressure in cylinder *h* on the left of the piston is 95 pounds, while that in chamber *R* and the auxiliary reservoir is slightly less, say 94 pounds, and the pressure in port *x* and the supplementary reservoir is still 110 pounds. To partally release the brakes the engineer partially reinstates brake-pipe pressure. We will say that he raises it from 95 to 100 pounds. As soon as the pressure in cylinder *h* rises a little, it moves the piston, slide valve and graduating valve to the release position as shown in Fig. 21. The pressure in cylinder *h* is now 100 pounds the auxiliary-reservoir pressure feeds up through feed groove *i* and ports *y*, *j* and *x* to 100 pounds. But the large volume of air in the supplementary reservoir is still only slightly below 110 pounds; it therefore tends to raise the pressure in chamber *R* above 100 pounds by air flowing in through port *x*. As soon as this pressure gets a little above 100 pounds, it moves the piston and graduating valve again to the left until the piston strikes the slide valve, as shown in Fig. 25. Feed groove *i*, ports *j* and *x* are now closed, preventing the auxiliary-reservoir pressure from rising any higher; at the same time port *m* is closed, which stops the exhaust of brake-cylinder air through ports *n*, *m* and *p* to the atmosphere; consequently only a part

Digitized by Google

of the brake-cylinder air escapes, and the pressure is correspondingly reduced, but the remaining pressure is retained. This is the *Graduated Release* feature.

Q. Can a second graduation in release be made?

A. Yes; the process just described can be repeated until the brake-pipe pressure is raised to the normal amount, and the brake-cylinder pressure completely released.

Q. What is the position just described, and shown in Fig. 25 called?

A. Release-Lap position.

Q. What occurs in the triple valve in Emergency applications?

A. The sudden reduction in brake-pipe pressure and cylinder *h* causes the piston, slide valve and graduating valve to move to the left with such force as to compress graduating spring 22, until the piston strikes the gasket at the end of the cylinder, as shown in Fig. 26. In this position, the slide valve uncovers port *t* in the seat and allows auxiliary-reservoir pressure to flow to the top of emergency piston 8, forcing it downward, thereby opening emergency valve 10, and allowing brake-pipe air to raise check valve 15 and flow rapidly through cavities *Y* and *X* to the brake cylinder. At the same time port *s* in the slide valve registers with port *r* in the seat and permits auxiliary reservoir air to flow to the brake cylinder. When the increasing brake-cylinder pressure and the decreasing brake-pipe pressure become equal, check valve 15 is forced to its seat by the spring between it and the emergency valve, so that no air can flow back from the brake-cylinder to the brake pipe. So far, the operation is the same as in the old standard quick-action triple valve. But with the L Triple other operations occur in emergency as follows: Port *c*, which leads to the left of the vent-valve piston 31, is connected by ports *d* and *n* in the slide valve with port *r* leading to the brake cylinder. In all other positions of the triple valve,

Digitized by Google

port *c* is open to chamber *R;* the right side of vent-valve piston 31 is always connected to chamber *R;* consequently at such times the vent-valve piston has equal pressures on both sides and vent valve 27 is held to its seat by the spring under it. But in emergency, the chamber on the left of the vent-valve piston is connected to the brake cylinder as just described, thereby relieving the pressure on the left, and causing the pressure still remaining in the right to force the piston and vent-valve to the left, as shown in Fig. 26. This opens the vent-valve and connects the supplementary reservoir to chamber *R* through port *x* and the vent valve. The result of this is that the volumes of both supplementary and auxiliary reservoirs are united and become equalized with the brake-cylinder, causing a much greater pressure of equalization than if the auxiliary reservoir alone was used.

Q. With 110-pound brake-pipe pressure, what pressure of equalization is obtained in emergency in the brake cylinder with the L Triple Valve?

A. Nearly 105 pounds.

Q. With the ordinary high-speed brake, the high pressure equalization is reduced by a reducing valve; is this also done with the L Triple Valve?

A. No. Referring to Fig. 26, cavity *q* in the slide valve does not conect with port *r* in emergency, so that the safety valve, connecting with port *b* is shut off from the brake cylinder. Consequently the high pressure is retained until the brake is released.

Q. Why is this?

A. Because emergency applications are for use only at times of danger, or to save life, and at such times, the greatest stopping power possible is necessary, regardless of everything else. The weights of cars are greater, and the speeds are higher than those common at the time that the high-speed re-

Digitized by Google

ducing valve was introduced, so that now with modern conditions, it is considered best to run the risk of sliding a few wheels, if the result makes a considerably shorter stop.

Q. Is the safety valve cut off from the brake cylinder at any other time?

A. No, only in emergency applications.

Q. In what positions of the triple valve does the vent valve operate?

A. Only in emergency.

Q. Does the vent valve remain open during the entire emergency application?

A. No; as soon as the two reservoirs and brake cylinder become equalized, the spring back of the vent forces it shut.

Q. What would happen if the vent valve stuck open?

A. Probably an emergency application would occur for every application of the brakes, whether desired or not. At any rate, a much higher pressure of equalization would be obtained than desired.

Q. What should be done in such cases?

A. Remove the cap nut from the vent-valve portion and examine the spring back of the vent valve. It is probably broken or weakened so as not to be able to force the vent valve to its seat.

Q. If dirt gets on the seat of the safety valve, what will happen?

A. The brake will gradually release in service applications, accompanied by a blow at the safety valve.

Q. Is any prevention made against dirt getting to the safety valve?

A. Yes, an air strainer is placed in the passage to the safety valve from the slide valve.

Digitized by Google

Q. With this triple valve, is there any air strainer where the brake-pipe air enters the triple valve, as there is in the old standard quick-action triple?

A. Yes, a *branch-pipe air strainer* is placed in the brake-pipe branch just where it connects with the cylinder pressure head.

Q. What diseases and troubles may be found in the L Triple Valve?

A. Besides those just mentioned, the same troubles and cures may be applied to the L Triple as already described under the old standard quick-action triple valve.

Digitized by Google

CHAPTER III.

WESTINGHOUSE FREIGHT EQUIPMENT.

Q. Name the different parts of the equipment.

A. 3 (Fig. 27) is the piston sleeve and head, 9 the release spring, 4 the front cylinder head, 2 the cylinder body, *A* the leakage groove, 7 the packing leather, 8 the expander ring, 6 the follower plate which holds the packing leather 7 to its place, *B* the pipe connecting the triple valve and brake cylinder, and 15 the gasket which makes a tight joint between the auxiliary, triple, and pipe *B* leading to the brake cylinder.

Q. Explain the use of the release spring 9 (Fig. 27).

A. When the brake is applied, air is put into the cylinder 2 through pipe *B*, and the piston 3 is forced to the left, compressing the release spring. When the air is released from the brake cylinder, the duty of the release spring is to force the piston to release position as shown in the illustration.

Q. What enters the sleeve 3 (Fig. 27)?

A. The push rod through which the braking power is transmitted to the brake rigging.

Q. Of what use is the expander ring 8?

A. To keep the flange of the packing leather 7 against the walls of the cylinder. The expander ring is a round spring.

Q. Of what use is the packing leather 7?

A. As air enters the brake cylinder, the flange of the packing leather is forced against the walls of the cylinder, thus making a tight joint to prevent the passage of the air by the piston and out to the atmosphere through the open end of the

Digitized by Google

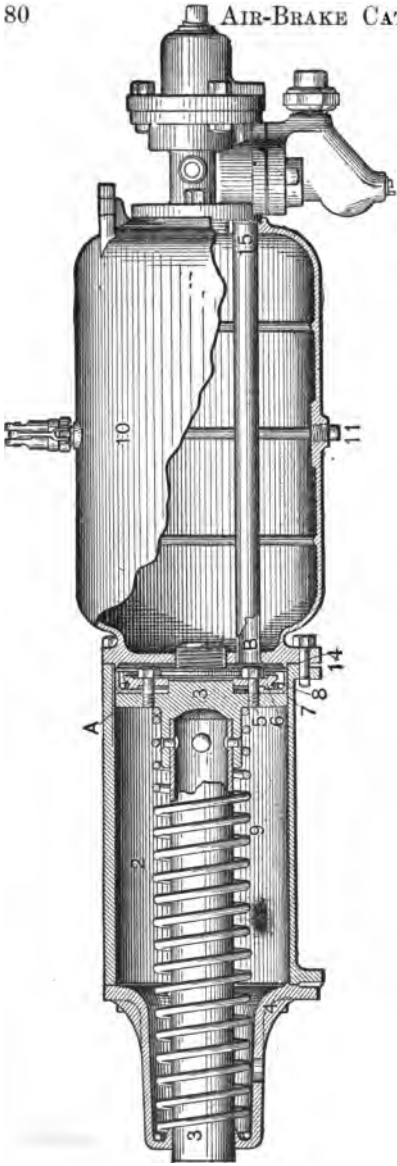

FIG. 27.—WESTINGHOUSE FREIGHT EQUIPMENT.

cylinder at the left. If the leather leaks, the brake will leak off.

Q. Of what use is the leakage groove A (Fig. 27)?

A. The piston as shown in the cut is in release position. If on a long train there should be any leak in the brake pipe that would draw a triple piston out far enough to close the exhaust port in the slide valve, and there were a leak into the brake cylinder, the pressure would gradually accumulate and force the piston out, causing the shoes to drag on the wheels were it not for the leakage groove. This will allow any small leakage into the brake cylinder to pass through the groove and out of the other end of the cylinder to the atmosphere.

Digitized by Google

If the brake connections are taken up so short that the piston will not travel by the leakage groove when the brake is set, the air will blow past the piston through the groove and release the brake on this car. In this case, were it not for the groove, the wheels would be slid.

Q. What is the duty of the pipe B?

A. When the brake is applied, air passes from the auxiliary reservoir through the triple and pipe *B* to the cylinder. When the brake is released, air passes from the cylinder through pipe *B*, the triple exhaust port and out to the atmosphere, or, if a retainer is used, it passes from the triple into the retainer pipe, which is screwed into the triple exhaust, and out of the retainer according to the position of its handle.

Q. Of what use is the auxiliary reservoir 10 (Fig. 27)?

A. This is where the supply of air is stored with which to apply the brake on this one car.

Q. What is the valve on top of the auxiliary?

A. It is called the release valve. By lifting on the handle of this valve the pressure in the auxiliary reservoir 10 may be released. If this valve leaks, after the brake is applied, the reduction of auxiliary reservoir pressure thus made will release the brake.

Q. What use has the plug 11?

A. To drain off any accumulation of water in the auxiliary reservoir.

Q. What harm will ensue if gasket 15 leaks?

A. The leak may be from the auxiliary reservoir to the atmosphere or from the auxiliary into pipe *B* leading to the brake cylinder. After the brake was applied, the reduction

of auxiliary reservoir pressure caused by this leak would allow the brake-pipe pressure to force this triple to release position and release this brake. The leak would then draw air from the brake-pipe through the triple feed ports, making a brake-pipe reduction that with any other leaks on the train would help to creep on the other brakes.

Q. Is the freight-car equipment different from the air-brake equipment on the passenger car?

A. It is smaller, but the principle of operation is the same. In a passenger equipment the pipe *B* does not run through the auxiliary reservoir and the auxiliary and brake cylinder are not fastened together. The appearance is different, but aside from size, they are alike.

Q. Why has the oil plug been removed from the brake cylinder?

A. So that it will be necessary to take the cylinder apart to clean it. Pouring oil into the oil hole is responsible for the ruination of rubber seats in emergency valves.

Q. Fig. 27 shows a standard equipment for freight cars; are they ever furnished in any other form?

A. Yes; the space limitation on some cars forbids the use of the combined equipment illustrated in Fig. 27. In such cases, what is known as the detached equipment is used, and the brake cylinder and auxiliary reservoir are connected by a suitable pipe.

In very exceptional cases two cylinders are used in connection with one reservoir and one triple valve, but the principle of operation remains the same. The usual piston stroke is twelve inches, but this is reduced to eight inches where twin cylinders are used, and in some special combined and detached equipments.

How many kinds of freight equipments are there 'h what weight of car are they used?

Digitized by Google

A. 8 and 10-inch equipments. The light weights of cars for which each is used are 22,000 to 37,000 for 8-inch, and 37,000 to 58,000 for 10-inch.

PISTON TRAVEL.

Q. What determines the amount of travel a piston will have?

A. The slack in the brake rigging and any lost motion in the car brought out by the application of the brake.

Q. How is the piston travel usually adjusted?

A. By changing the position of the dead truck levers, unless an automatic slack-adjustment is used.

Q. Which is called the dead lever of a truck?

A. The one held stationary at the top with a pin.

Q. What is the other lever on the truck called?

A. The live lever.

Q. What is the lever fastened to the piston usually called?

A. The piston lever.

Q. What is the corresponding lever at the other end of the cylinder in a passenger equipment called?

A. The cylinder lever if connected to the cylinder. When connected to a fulcrum as in freight service, it is commonly called a floating lever.

Q. Are these levers ever spoken of differently?

A. Yes, sometimes both are referred to as cylinder levers.

Q. In passenger equipment there is sometimes a lever between the cylinder levers and truck levers, one end of which is connected to the hand brake and the other to the live truck lever. What is this lever usually called?

A. The Hodge, or floating lever; the latter name is the one more commonly used.

Digitized by Google

Q. We have seen in studying the triple valve that a five-pound brake-pipe reduction caused the triple to allow air to expand into the brake cylinder from the auxiliary reservoir until its pressure was reduced five pounds. How much pressure does this give us in the brake cylinder?

A. That depends upon the piston travel. It may be more or less than five pounds; it might be five pounds.

Q. Explain this answer.

A. We notice that the auxiliary reservoir is much larger than the brake cylinder; the reservoir pressure is high, the brake cylinder has no pressure; as the reservoir pressure falls, the brake cylinder pressure builds up; the amount that it builds up depends on the volume of the cylinder, that is, on the distance that the piston moves out: but it must be remembered that a small part of the air put into the cylinder goes through the leakage groove before the piston gets by and closes it. There is still another point. If no air were put into the brake cylinder and the piston were pulled out when the exhaust port was closed, a vacuum would be formed. When the air enters the cylinder it must first fill this space to atmospheric pressure before a gage placed on the cylinder would begin to show any pressure. The longer the travel, the more air it would take to fill the space and the less pressure there would be for the five pounds reduction in the reservoir.

Q. Which would give a higher pressure for a given reduction, long or short piston travel?

A. Short travel.

Q. Why?

A. Because with a short travel the same amount of air would be expanded into a smaller space.

Q. With the 8-inch freight equipment and old standard triple valve, how much brake-cylinder pressure do we

get for a seven-pound brake-pipe reduction with a 6 and a 9-inch travel?

A. Referring to the table we see that we get seventeen pounds with the 6-inch, and eight pounds with the 9-inch travel.

Brake Pipe Reduction.	Piston Travel and Resultant Cylinder Pressure for 8-Inch Freight Equipment and Old Style Triple Valve.							
	4	5	6	7	8	9	10	11
7	30	..	17	13	10	8	Piston not entirely out	
10	50	39	31	25	20	17	14	11
13	58	56	45	37	31	27	23	19
16	..	..	54	50	42	36	32	28
19	.	.	..	52	50	44	41	36
22	..	..	..	..	..	49	48	44
25	..	..	..	..	..	..	..	47

There are two spaces where it says "Piston not entirely out," where no brake-cylinder pressure is given for a seven-pound brake-pipe reduction. This does not mean there was no pressure there, as there must have been or the piston could not have gone out and compressed the cylinder release spring. The ordinary air gage does not register any pressure less than five pounds, and with a seven-pound brake-pipe reduction the pressure gotten in a ten- or eleven-inch piston travel is less than five pounds.

Seventy pounds brake-pipe pressure was used in obtaining these figures.

Q. With a sixteen-pound reduction?

A. Fifty-four pounds with the 6-inch, and thirty-six pounds with the 9-inch.

Q. With a twenty-two-pound reduction?

A. After the sixteen-pound reduction, the brake did not set any harder on the 6-inch travel because the auxiliary and brake-cylinder pressures equalized at that point, and this brake was fully set. With the 9-inch travel the air from the auxiliary reservoir had 4 inches more space into which to expand, and the brake was fully set when a twenty-one pound

reduction had been made, giving forty-nine pounds brake-cylinder pressure.

Q. What does this show?

A. That a brake with a short piston travel is more powerful than one with a long travel; that a brake with the auxiliary reservoir and brake-cylinder pressures equalized cannot be applied any harder by a further reduction of brake-pipe pressure, and that if piston travel varied in a long train, between 4 and 11 inches, there would be no uniformity in the braking power applied in the different parts of a train.

Q. What difference in brake-cylinder pressure is obtained with the 8-inch freight equipment using the type "K" triple valve?

A. For light brake-pipe reductions, a much higher brake-cylinder pressure is obtained with the type "K" triple valves; while for full-service applications, there is very little difference. Generally speaking, we obtain for a 5-pound brake-pipe reduction about three times as much cylinder pressure with the type "K" triple valve as with the old standard; for a 10-pound reduction, about 50 per cent. more pressure; for a 15-pound reduction, about 20 per cent. more pressure; and for a 20-pound reduction, there is practically no difference.

Q. What brake-cylinder pressures are obtained with the 10-inch freight equipment, as compared with the 8-inch?

A. Practically the same, for the same brake-pipe reductions.

Q. With an 8-inch freight equipment and the old standard Westinghouse triple valve, at about what pressures do the brake-cylinder and auxiliary reservoirs become equalized when 70-pound brake-pipe pressure is used?

A.

4″	5″	6″	7″	8″	9″	10″	11″	piston travel
58	56	54	52	51	49	48	47	pounds
12	14	16	18	19	21	22	23	brake-pipe reduction

Digitized by Google

Q. What would be the approximate brake-cylinder pressure, with the travel as given in the table, were the brakes set in emergency, using an 8-inch freight equipment.

A.	4 in.,	5 in.,	6 in.,	7 in. piston travel.
	62	61	59½	58½ emergency pressure.
	8 in.,	9 in.,,	10 in.	11 in. piston travel.
	57½	56½	55½	55 emergency pressure.

Q. Why do the brakes set harder with the quick-action triple in emergency than in service?

A. Because in the emergency application the quick-action triples put air from both the auxiliary and brake pipe into the brake cylinder.

Q. Can full emergency pressure be obtained after having made a light brake-pipe reduction in service application?

A. No.

Q. Can any gain be made?

A. Yes, if the reduction has not been too great. By referring to the table we see that a thirteen-pound reduction sets a 4-inch travel brake in full. If emergency were now used this brake would not set any harder, while we might gain a little on the long travel. With a given brake-pipe reduction, we would gain most on the car with the long travel, but on neither would we get full emergency pressure.

Q. Can a train be handled smoothly with uneven travel throughout the train?

A. Not as smoothly as when the travel is more uniform.

Q. What will be the effect with short travel at the head of the train and long at the rear?

A. Having more braking power at the head would cause the slack to run ahead, causing a jar.

Digitized by Google

Q. What if the short travel were at the rear of the train?

A. The tendency would be for the slack to run back and break the train in two, especially if the train were on a knoll.

Q. How else would the piston travel affect the smoothness of the braking?

A. In releasing the brakes.

Q. Suppose we had a train half of which had 4-inch travel and the other half 9-inch, which brakes would start releasing first if the engineer had made a ten-pound brake-pipe reduction and then, wishing to release the brakes, increased the brake-pipe pressure?

A. They should all start about the same time, but the tendency is always for head brakes to start releasing first if the travel is about alike, as the air enters the brake pipe from the main reservoir at the front of the train, and the pressure is naturally a little higher here when recharging.

Q. Is the same true after a thirteen-pound reduction?

A. Yes.

Q. After a twenty-two-pound reduction?

A. No; the long travel brakes will start releasing first.

Q. Why?

A. Referring to the table we see that the 4-inch travel was not applied any harder after a twelve-pound reduction had been made; but the 9-inch travel continued applying harder until a twenty-one pound reduction of brake-pipe pressure had been made. With the brakes fully set we have fifty-eight pounds pressure in the auxiliary reservoir and cylinder of the 4-inch travel car and forty-nine on the long. Brake-pipe pressure has to overcome auxiliary reservoir pressure to force the triple pistons to release position, and it is easier to overcome forty-nine than fifty-eight pounds; hence the triple pis-

Digitized by Google

ton on the long travel car will go to release position with less of an increase of brake-pipe pressure than will the triple on the short travel car.

Q. State the general rule in regard to this question.

A. If reductions have not been continued after cars with the short piston travel have been fully set, all brakes should start releasing about the same time; but if the reductions of brake-pipe pressure are continued after the short travel brakes are fully set, an increase of brake-pipe pressure will start the long travel brakes releasing first.

Q. If a long and a short travel brake are started releasing from the same pressure at the same time, which will get off first and why?

A. The short travel, because the piston has a shorter distance to go and there is a less volume of air to be gotten rid of through the exhaust port of the triple.

Q. We have two cars with the same piston travel. What is the trouble if both are started releasing at the same time and one gets off quicker than the other?

A. The release spring in one cylinder is weaker or the cylinder corroded.

Q. What harm would it do to take a piston travel up to 2 inches.

A. The piston could not get by the leakage groove, and the brake would not stay set.

Q. What harm would it do to let the travel out to 13 inches?

A. The piston would strike the head, and we would have no brake on that car.

Q. Does having very long piston travel in a train require any more work of a pump in descending grades?

A. Yes; the air has to be used more expansively, and the pump will have to supply more air in recharging.

Q. If we try the piston travel on a car when standing, will we find it to be the same as when running?

A. No.

Q. Why not?

A. For several reasons; the shoes pull down farther on the wheels when running; the king bolts being loose allow the trucks to be pulled together; spring in brake beams, loose pins in jaws, loose brasses on journals, the give in old cars, and any lost motion that will throw slack into the brake rigging; all these will cause the piston travel while running to be greater than that while standing.

Q. If the piston travel is adjusted when a car is loaded, will it remain the same when the car is light?

A. It will, if the brakes are hung from the sand plank, but most brakes are hung from the truck bolster or the sill of the car. When the car is loaded, the truck springs are compressed and the shoes set lower on the wheels. When the car is unloaded, the truck springs raise the bolster and car body, thus raising the shoes so that there is less clearance between the brake shoes and wheels. This shortens the piston travel, as the piston does not have to travel so far to bring the shoes up to the wheels.

Q. How could you tell the piston travel on a car if it had no air in it?

A. This can be told on freight cars where the hand brake and air brake move the push rod in the cylinder in the same direction when applying the brake. To tell the travel, shove the push rod into the cylinder until it bottoms. Make a mark on the push rod and set the hand brake. The distance the mark on the push rod has moved will be, approximately, the piston travel when using air.

Digitized by Google

Q. How much variation is permissible?

A. The smaller the amount of variation the better, but in road service it is the aim to keep piston travel between 5 and 8 inches; on long heavy grades it is customary to have no travel exceed 6 inches.

Q. Is there any device which will keep a constant piston travel on a car without any outside aid?

A. Yes, a slack adjuster.

Q. What slack adjuster is in most general use?

A. The American Brake-Slack Adjuster.

Q. Is this better than a hand adjustment?

A. Yes, because it does its work when the car is in motion, and true travel is had because all lost motion is brought out at this time.

Q. What is the most satisfactory travel for general use?

A. Between 6 and 7 inches.

Q. Where would a moderately long travel be considered better than a short one?

A. In a practically level country, where with short travel and a large number of air cars in a train, the train might be slowed up or stopped with a light brake-pipe reduction, thus causing too frequent releases.

Q. What harm would a too short travel do?

A. The piston might not get by the leakage groove, and the shorter the travel the more danger of sliding the wheels on acount of the greater braking power developed. A too short travel does not give sufficient shoe clearance, and causes a train to pull hard if the brake shoes drag.

Q. On most passenger cars piston travel can be taken up by winding up the hand brake a little, as the two

Google

brakes work in opposition to each other. Is this a good practice?

A. No; it is the act of a lazy workman, and is dangerous.

Q. How is it dangerous?

A. If the air brake is set quickly, it is likely to snap the brake chain, and if a passenger had hold of a hand brake wheel when the brake was applied, if the dog were not caught, the wheel flying round might break his hand or arm.

Q. If the hand brake on a car works with the air, and the air brake was applied, what would result if the hand brake were then applied?

A. The braking power developed would be too much for the safety of the wheels, rods, etc., since the resultant braking power is equal to the sum of the power of both brakes.

Q. If the air brake were then released what difficulty would be experienced?

A. Since the hand brake retains all of the power of both brakes, in this case it would be a very difficult matter for the brakeman to release the brake.

Q. With this kind of a brake what would result if the hand brake were first applied and then the air?

A. If the air brake were more powerful than the hand brake, slack would be thrown into the hand brake chain, and the gain in power would be the excess power of the air over that of the hand brake. If the air power were not as strong as that of the hand no effect would be produced since the pull in the hand brake rod would be diminished an amount equal to the power of the air.

Q. If the hand and air worked opposite, that is, they tended to move the push rod in opposite directions to apply the brake (see Fig. 108), what effect would be produced if the air brake was applied and then the hand brake?

Digitized by Google

A. The air brake fully applied is usually stronger than the hand brake, hence the pull on the hand brake rod due to the air pressure would be greater than could be exerted by the brakeman, and the brake wheel could not be turned after the slack in the brake chain had been taken up. Under these conditions no braking power could be gained by using the hand brake.

Q. If the hand brake were first applied and then the air what would be the result?

A. Applying the hand brake took up all the slack in the brake rigging and forced the push rod and piston in as far as they could go. When the air from the auxiliary reservoir passed through the triple valve to the brake cylinder it would pass through the leakage groove to the atmosphere and simply the power of the hand brake would remain. The clearance in the cylinder being very small would result in a very high pressure when the air first entered, thus tending to strain the rods and brake-chain, but the air would quickly escape as explained.

Q. Which is the better brake from the standpoint of danger to the brakemen?

A. The one in which both work together. If, where the brakes work opposite, a man is using the hand brake at the same time the engineer uses the air, or an air hose bursts, the power will turn the brake-wheel in the opposite direction tending to throw the brakeman from the train.

Q. If the cars of a train are equipped with air and hand brakes working together, and the train was being controlled by air, what could be done if the engineer lost control of the train?

A. The engineer could call for brakes and without releasing the air, the crew could add the power of the hand brakes to that of the air.

Digitized by Google

Q. What would have to be done in a case like this if the hand and air brakes worked opposite?

A. After calling for brakes it would be necessary for the engineer to make a release before the crew could apply the hand brakes, since if this were not done and the hand brakes were applied, any leakage of brake cylinder pressure would allow the piston to move in, thus throwing slack into the brake rigging and releasing the hand brake.

Q. How about leaving cars on a grade if the air brake is applied?

A. If the hand and air work together, the hand brake can be applied without first releasing the air and it will remain set after the air leaks off. If the brakes work opposite, it is necessary to bleed the car before applying the hand brake; if this is not done, the release of the air brake by leakage will also release the hand brake and the car will run away.

To be on the safe side it is best, as a general rule, to always release the air on one car at a time and apply the hand brake, when leaving a car or train on a grade; but this would not be necessary, from the standpoint of safety, if all brakes worked together.

Q. Are most brakes designed to work together or opposite?

A. A large majority of freight car brakes are designed to work together, while in passenger service the opposite is true; but the importance of this question will result eventually in practically all brakes being designed to work together.

THE AMERICAN AUTOMATIC BRAKE-SLACK ADJUSTER AND PISTON-TRAVEL REGULATOR.

Q. Name the different parts of the American Brake Slack Adjuster shown in Fig. 29?

Digitized by Google

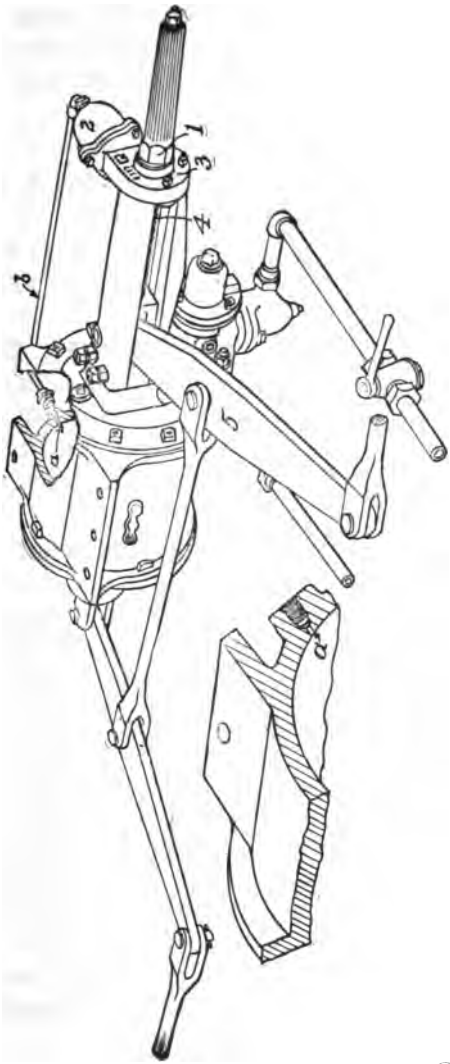

FIG. 28.—SHOWING APPLICATION OF AMERICAN BRAKE SLACK ADJUSTER TO A PASSENGER CAR EQUIPMENT.

Digitized by Google

A. The cylinder; the packing leather held in position by the expander ring and follower; the pawl; the pawl spring; the piston spring; the cylinder head and casing; and the ratchet nut.

Q. Name the parts shown in Fig. 28?

A. 1 is the ratchet nut; 2, the cylinder; 3, the cylinder head and casing; 4, the adjuster screw; *a*, the port which connects pipe *b* with the inside of the cylinder; and *b*, a pipe connection from the slack adjuster cylinder with port *a* of the main cylinder.

Q. What is the object of the lug a (Fig. 29)?

A. As illustrated in Fig. 29, its object is to lift the pawl out of the ratchet nut when the adjuster piston is in release position. In the position shown the ratchet nut can be turned by hand to take up or let out slack when necessary, as when applying new brake shoes.

Q. Explain the operation of the adjuster.

A. In Fig. 29 it is shown both in the normal or release position, and as when applied. If there is sufficient slack in the brake rigging, so that the piston in the large cylinder (Fig. 28) uncovers port *a* when the brake is applied, cylinder pressure will pass through port *a*, pipe *b*, and into the slack-adjuster cylinder (Fig. 29). The piston will be forced out, compressing the piston spring. The movement of the piston disengages the pawl from lug *a*, and the pawl spring causes the pawl to engage in the teeth of the ratchet nut.

When the brake is released and the piston in the brake cylinder is forced to release position by the release spring, port *a* is connected with the non-pressure end of the cylinder, hence the air in the slack adjuster cylinder passes through pipe *b* (Fig. 28), port *a*, and out to the atmosphere through the non-pressure head.

When the air is released from the slack adjuster cylinder

Digitized by Google

the piston spring forces the piston back and it in turn, through the pawl, turns the ratchet nut which draws the screw away from the cylinder. Lever 5 (Fig. 28) is fastened to a crosshead attached to the adjuster screw, hence the lever is moved correspondingly, the effect of which is to draw all the brake shoes nearer to the wheels.

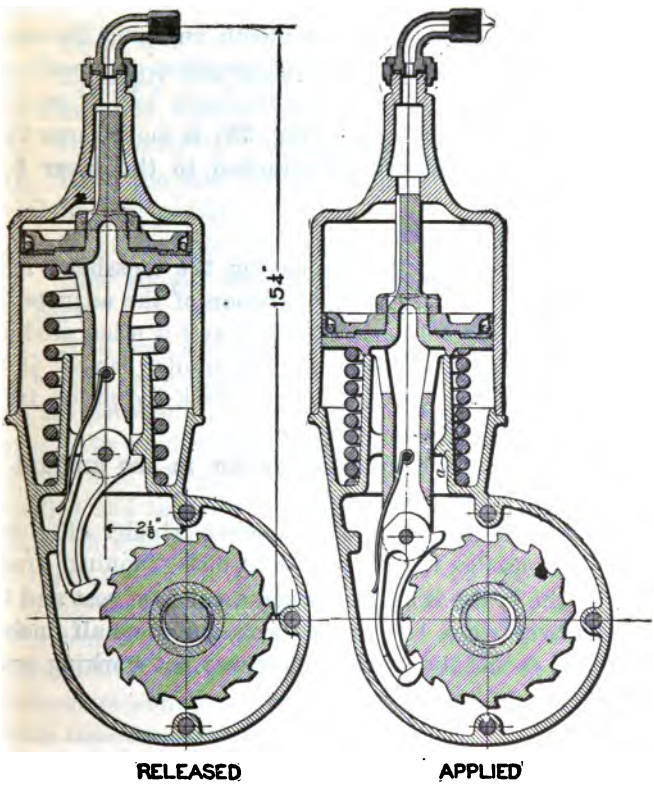

FIG. 29.—SECTIONAL END VIEW OF AMERICAN AUTOMATIC BRAKE SLACK ADJUSTER.

Digitized by Google

Q. How does this shorten the piston travel?

A. The shoes being nearer the wheels it will require a less movement of the piston to bring the shoes in contact with the wheels.

Q. How many teeth does the pawl skip at each movement of the adjuster piston throughout its stroke, and what movement of the crosshead attached to lever 5 (Fig. 28) result?

A. The pawl usually skips one tooth, engaging the second of the adjuster nut each time. One operation of the adjuster moves the crosshead, connected to the lever, 1-32 of an inch.

Q. If the adjuster nut 1 (Fig. 28) is moved one turn, how far will the crosshead attached to the lever 5 be moved?

A. One-quarter of an inch.

Q. What is the object in having the crosshead move but 1-32 of an inch for each operation of the adjuster?

A. When a car is in motion false travel is often produced owing to unevenness of the track and similar causes; if the adjuster should take up all this extra slack the piston travel would frequently be found too short.

Q. What is the controlling factor in the amount of piston travel to be permitted?

A. The location of port *a* in the brake cylinder (Fig. 28). It is usually located to obtain an eight-inch "running" travel.

Q. If the brake is applied when a car is at rest and the piston travel were but six or six and one-half inches, would you decide that the adjuster was not working properly?

A. No.

Q. Explain the last answer?

A. The slack adjuster adjusts the "running" travel at eight inches, and as the "running" is always greater than the

Digitized by Google

"standing" travel, we would expect to find the piston travel shorter when the car was at rest.

Q. Would the "standing" travel be the same on all cars?

A. No; this depends upon the total leverage and lost motion.

Q. Would the "running" travel be the same on all cars?

A. Yes.

Q. To apply new shoes it is necessary to increase the shoe clearance; how is this done?

A. By turning the ratchet nut 1 (Fig. 28) to the left.

Q. After the new shoes are applied how may the piston travel be shortened?

A. By turning the adjuster nut to the right.

Q. How should we proceed to apply a slack adjuster to a car?

A. Drill port *a* so that brake cylinder pressure can reach pipe *b* after the cylinder piston has travelled eight inches and erect the parts and piping as shown in Fig. 28, pipe *b* to be copper. The smaller part of port *a* (Fig. 30) is drilled with a ⅛-inch drill; the part of the port into which pipe *b* connects is drilled and tapped for ¼-inch pipe. After erecting, test joints with soap suds. Next put on a new set of brake shoes and adjust the piston travel by means of the dead levers, from six to six and one-half inches.

The length of the different rods should be such that the dead and live levers will have an inclination so that when the shoes are worn out they will have a corresponding inclination in the opposite direction.

Q. What is the standard length between centers of holes in the rod connecting the cylinder levers when using the slack adjuster?

Digitized by Google

A. 42 inches for middle connection.

Q. What is invariably the cause of the piston travel being too short on a car equipped with an American Brake Slack Adjuster?

A. Either some of the slack has been taken up by the hand brake, or the position of the dead levers has been changed.

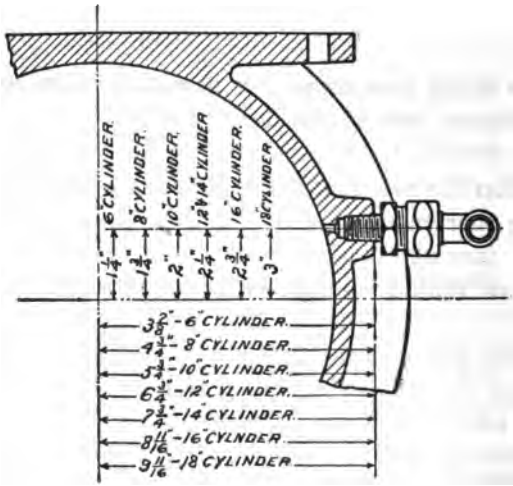

FIG. 30.—SHOWING PROPER METHOD OF DRILLING BRAKE CYLINDERS WHEN USED WITH THE AMERICAN AUTOMATIC BRAKE SLACK ADJUSTER.

Q. What may occasion the piston travel to become too long?

A. Pipe *b* may be obstructed, leaks may exist in pipe *b*, or the slack adjuster cylinder, or the packing leather. The car may have been running some time with the slack partly taken up on the hand brake, a subsequent entire release of which would introduce an amount of slack that it would require some time for the adjuster to take up.

Digitized by Google

Q. Is there ever a time when, with the brake released, the rachet nut can not be turned?

A. Yes; when the crosshead is at the end of its stroke.

Q. Why can the rachet nut not be turned under these conditions?

A. With the ratchet nut at the end of its stroke, and the piston travelling beyond the limit, air will operate the slack adjuster piston, causing the pawl to engage a tooth of the ratchet nut, in which position it will remain, since, the crosshead being at the end of its stroke, the adjuster screw cannot be turned.

Q. How can the pawl be disengaged?

A. The adjuster is so designed that the adjuster screw when at the end of its stroke is drawn against a set screw at the end of the adjusting nut (Fig. 28), as shown in the cut. Removing this set screw permits of a further movement of the crosshead and the usual operation takes place, allowing the pawl to be disengaged. The adjuster nut may then be turned by hand, thus moving the crosshead nearer the large cylinder for the purpose of giving sufficient slack to permit of the application of new brake shoes. The set screw should always be replaced after the pawl has been liberated and the crosshead moved back.

Q. How often should the slack adjuster cylinder be cleaned and lubricated?

A. About once in six months, every time the brake cylinder is cleaned and oiled.

PRESSURE RETAINING VALVES.

Q. With what equipments is the retaining valve used?

A. Throughout the country on freight cars, and on engines, tenders, and passenger cars in mountainous country.

Digitized by Google

Q. Why do they not use it on passenger cars in hilly country?

A. It is not necessary, as the higher braking power used in passenger service is sufficient to run moderate hills with safety.

Q. Where is it usually located?

A. Usually at the end, close to the brake standard on freight cars, and at the end about on the level of the edge of the hood on passenger cars.

Q. Where is it located on cars having vestibules?

A. On the outside of the vestibule, in which case a special valve is used, the handle of which extends within the vestibule (see Fig. 34).

Q. To what is it connected?

A. To the exhaust port of the triple by means of a ⅜-inch or ½-inch pipe.

Q. What is its use?

A. To retain pressure in the brake cylinder to steady the train, and keep its speed from increasing too rapidly while the engineer is recharging the auxiliary reservoirs.

Q. How do the handles of all valves stand when not in use?

A. Straight down.

Q. How do they stand when in use?

A. In the position shown in the cut (Fig. 31).

Q. If the brake is not applied, can it be set by turning up the retainer handle?

A. No; the retainer can be used only to hold air in the brake cylinder that has already been put there.

Q. Explain the passage of the air through the retainer when not in use.

Digitized by Google

A. With the retainer handle pointing down, as when not in use, any air coming from the cylinder would pass through ports *b, a,* and out to the atmosphere through port *e.*

Q. Explain the passage of air through the retainer when in use, as shown by the cut.

A. When the engineer increases his brake-pipe pressure the triple assumes release position, and the air passing from

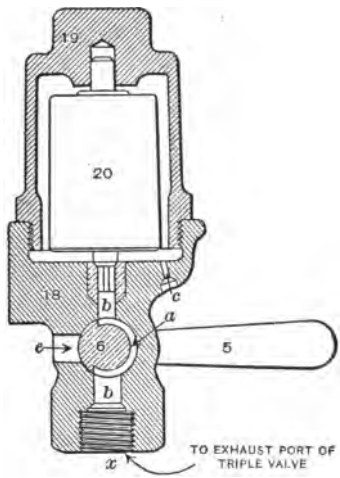

FIG. 31.—PRESSURE-RETAINING VALVE.

the brake cylinder has to pass out to the atmosphere through the retaining valve. With the retainer handle turned up, the air passes through ports *b, a,* and *b,* until it strikes the weighted valve 20. Any pressure over fifteen pounds forces this valve from its seat and passes through the restricted port opening *c* to the atmosphere. When the pressure in the cylinder is reduced to fifteen pounds, it is held back by the valve 20.

Digitized by Google

Q. What is the size of the small end of port c?

A. One-sixtenth of an inch in diameter.

Q. Why is it made so small?

A. To keep the brake cylinder pressure from escaping to the atmosphere too rapidly after valve 20 is lifted.

Q. How long will it take the cylinder pressure to reduce from fifty down to fifteen pounds through this retainer?

A. About twenty or twenty-five seconds, during which time the auxiliary reservoirs with an average length of train have become pretty well charged.

Q. Have all retainers this restricted port c?

A. No; in some old retainers there are two ports of ¼-inch diameter each.

Q. What is the valve shown in Fig. 32?

A. This is the double-pressure retaining valve manufactured by the Westinghouse Company. It will retain either 15 or 30 pounds pressure in the brake cylinder according to the position of the handle of the valve. It is spoken of as the 15-30 retainer.

Q. Explain its operation.

A. Its operation is about the same as the 15-pound valve, that is, if the handle points down no pressure will be held in the cylinder when the triple assumes release position. When in a horizontal position it retains 15 pounds and when in a position midway between the horizontal and the vertical a pressure of 30 pounds is retained.

It will be seen that the handle controls the lift pin 9, Fig. 32, and the lift pin in turn controls the upper weight. When the handle stands in the horizontal position the upper weight is lifted and the small weight controls the pressure; if in the mid positon the upper weight is not lifted and the combined weight of the small and large weight act against the cylinder pressure to retain it. The escape of air is as in the 15-pound

valve, that is, it escapes slowly to the atmosphere through the restricted port when the valve is in use.

Q. What is the necessity for a valve which will hold either 15 or 30 pounds?

A. It has been found that on the heavier grades and at speeds that the railroads wish to maintain, that the 15-pound valve is not sufficient to permit of a recharge being accomplished without gradually losing pressure. The use of the 30-pound position permits of greater safety, speed and greater tonnage.

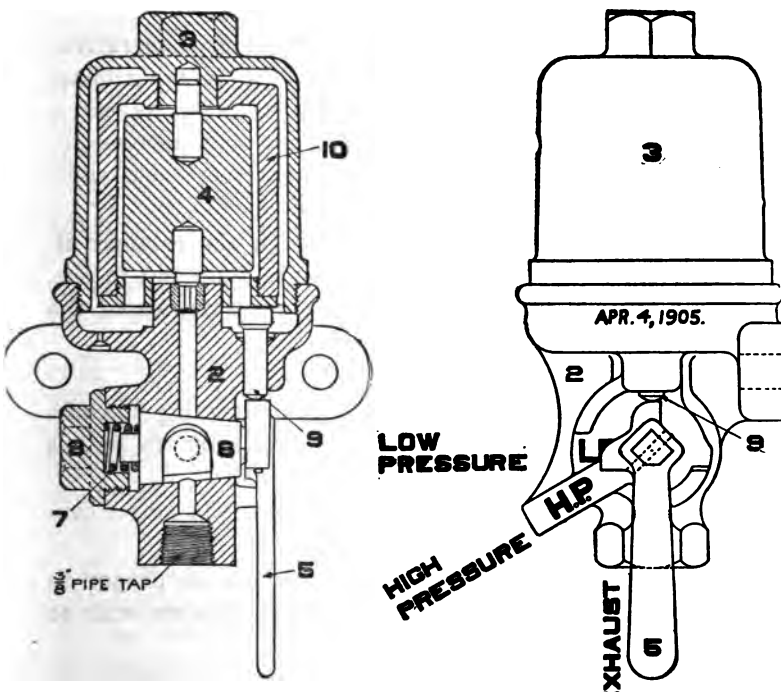

FIG. 32.—THE WESTINGHOUSE DOUBLE-PRESSURE RETAINING VALVE.

Q. Will a retainer hold more pressure with a long or a short piston travel on a car?

A. It holds the same pressure regardless of the travel. The volume held is greater on the long travel car.

Q. How do we test retainers?

A. Have the engineer apply the brakes, and turn up the retainer handles. Then signal him to release, and wait about half a minute, after which walk along and turn down the handles. If a blow accompanies the turning down of the handles, the retainer is working properly, otherwise the pressure has leaked away.

Q. What troubles would make a retainer inoperative?

A. A leak in the plug valve operated by the retainer handle; weight 20 (Fig. 31) being gone or dirt on its seat; a split pipe leading from the triple exhaust to the retainer; or a leak in the packing leather in the brake cylinder which would allow the air to escape to the atmosphere.

Q. What could be the trouble with the retainer if, after the brake was applied and the retainer put in use, no air escaped from it when the engineer increased the brake-pipe pressure?

A. Port *c* might be blocked.

Q. If we wish to use a retainer in descending a grade, should the handle be turned up before or after the brakes are applied?

A. It makes no difference, if everything is in proper condition.

Q. Explain a case where it would not be proper to turn up the retainer handle until just before we wish to use it.

A. If the rubber-seated or the slide valve in the triple leaked, and we turned up the retainer handle, air would accumulate to a pressure of fifteen pounds in the cylinder if

Digitized by Google

the leakage groove were closed and set the brake on this car. If the train were just pulling over a summit, the brake being on might stall the train.

Q. How could we tell if it was safe to turn up a retainer handle before reaching the top of a hill and not have the brakes drag?

A. Put the hand over the exhaust port and hold it there a few seconds, to see if any air is issuing; if not, it is safe to turn up the handle.

Q. Give a rule to produce best results in using the retainer.

A. In testing retainers while standing, turn up the handles at your convenience before or after the brakes are applied; but using them on the road, turn them up after the brakes are applied or a short time before wishing to us them.

Q. Is a retainer ever used except to steady a train when recharging?

A. Yes; when brakes have been applied too hard, a few are sometimes used to keep the slack bunched after releasing, when drifting along preparatory to making a stop.

Q. Set a brake with the full service application, then turn up the retainer handle, release and recharge. After charging the auxiliary in full again, make a full service reduction. Will the brake set any harder one time than another?

A. Yes, it will set harder the second time.

Q. Why?

A. When we started to apply the brakes the first time, we had seventy pounds auxiliary reservoir pressure and nothing in the brake cylinder. The second time we had seventy in the auxiliary and fifteen pounds in the brake cylinder. By comparison we see that we had more air the

Digitized by Google

second time with which to do our braking, and the pressures will therefore equalize higher.

Q. Would we gain more the second time over that of the first with a long or a short piston travel?

A With the long, because the retaining valve on the long travel car retains the same number of pounds in the cylinder as on the short one, but a larger volume; having a greater volume the pressures equalize correspondingly higher.

Q. Do we gain the whole fifteen pounds more the second time over what is obtained the first?

A. No; we gain from about three to six pounds pressure, according to the piston travel.

Q. About how much pressure do we get in the brake cylinder for a five-pound brake-pipe reduction?

A. It varies from seven to eleven pounds with average piston travel. It may be more or less, but this would be a fair average.

Q. After getting the use of the fifteen pounds that the retainer holds, how much pressure would we then get in the cylinder for a five-pound brake-pipe reduction with an average piston travel?

A. Between thirty and forty pounds.

Q. Where a twenty-pound reduction will set a brake in full without the aid of the retainer, how much reduction is necessary with the fifteen pounds it holds to aid?

A. From twelve to fifteen pounds with fair travel, and old style New York or Westinghouse triples about 15 pounds with the quick-service triple.

Q. Name another gain after obtaining the use of the retainer.

A. If we have to apply the brakes in full, it does not take so long to recharge, as the auxiliary and brake cylinder pressures equalize higher with the retainer to aid.

Digitized by Google

(1) Piston Travel. Inches.	(2) Emergency. Pounds.	(3) Emergency with Retainer. Pounds.	(4) 5 Pounds Service Reduction. Pounds.	(5) 5 Pounds Service Reduction with Retainer. Pounds.	(6) Full Service. Pounds.	(7) Full Service with Retainer. Pounds.
4	62	65	23	59	57½	61
5	61	63	19½	55	55½	59
6	59½	63	13½	51	53	58
7	58½	62	11½	43	52	57
8	57½	62	10	38	50½	56
9	56½	61½	8	35	48	55
10	55½	61	+	32	46	54
11	55	60	+	30	45	53

The above figures were obtained by taking an average of four tests for each condition, using old style Westinghouse triple valves.

Each test was made with a brake pipe and auxiliary reservoir pressure of seventy pounds.

The first column represents the piston travel.

The second column represents the brake-cylinder pressure obtained in emergency.

The third column represents the brake-cylinder pressure obtained in emergency after the retainer has been used; that is, there was already a pressure of fifteen pounds in the brake-cylinder held by the retainer when the emergency was used. These figures would be the same for either the old style or quick-service Westinghouse triple valves.

The fourth column represents the brake-cylinder pressure obtained with a five-pound service reduction.

The fifth column represents the brake-cylinder pressure obtained with a five-pound service reduction after once obtaining the use of the air held in the cylinder by the use of the retainer.

The sixth column represents the brake-cylinder pressure obtained with a full service reduction.

The seventh column represents the brake-cylinder pressure obtained with a full service reduction after getting the use of the retainer.

+ simply means that the gauge used registered no pressure less than five pounds. With an 11-inch travel the air is expanded into so large a space that a very small pressure is obtained.

The table should be read from the left to the right.

Digitized by Google

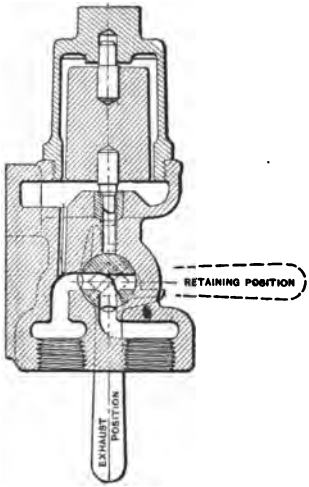

FIG. 33.—RETAINING VALVE USED WITH 12, 14 AND 16-INCH BRAKE CYLINDERS.

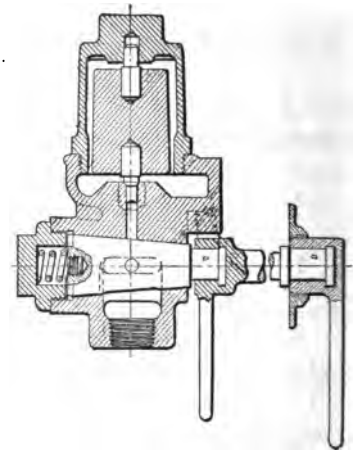

FIG. 34.—PULLMAN RETAINING VALVE, USED ON VESTIBULE CARS.

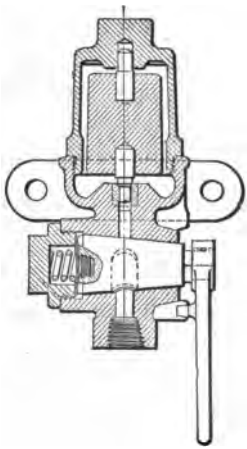

FIG. 35.—STANDARD RETAINING VALVE USED WITH 6, 8 AND 10-INCH BRAKE CYLINDERS.

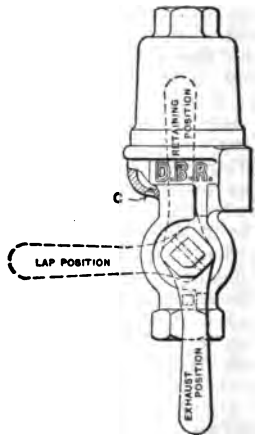

FIG. 36.—DRIVER-BRAKE RETAINING VALVE.

Digitized by Google

Q. What are the retaining valves shown in Figs. 33, 34, 35, and 36?

A. Figs. 33 and 34 represent valves designed to operate with 12, 14 and 16-inch cylinders. Though slightly different in structure, the operation is practically the same as the one already described.

Q. Why is it necessary to have two sets of retaining valves for use with 6, 8, and 10; and 12, 14, and 16-inch cylinders?

A. It is essential in releasing brakes that the pressure in all cylinders be reduced about alike. The ports in the valves for use with 12, 14 and 16-inch cylinders are correspondingly larger than those in the valves for use with the smaller cylinders.

Q. What is the purpose of the extension handle (Fig. 34)?

A. This valve is for use on vestibule cars. The body of the valve is located outside the vestibule, but the handle extends within.

Q. What is the common name for this valve?

A. The "Pullman Retaining Valve."

Q. What is the difference between this valve and the corresponding one for use on cars not equipped with vestibules?

A. The keys are set at right angles to each other in the bodies of the two valves and, as already explained, the "Pullman" valve has an extension handle.

Q. Is the operation of the two and the results accomplished the same?

A. Yes.

Q. How many kinds of retaining valves are furnished by the Westinghouse Company, and what is their use?

Digitized by Google

A. Five. The one shown in Fig. 35 is for use with 6, 8, and 10-inch cylinders on non-vestibule cars; practically the same valve, but with an extension handle and key at right angles, is used on vestibule cars. Figs. 33 and 34 represent the corresponding valves for use with 12, 14, and 16-inch cylinders. Fig. 36 is a cut of the Driver-Brake Retaining Valve.

Q. How does the Driver-Brake Retaining Valve operate?

A. In the same general way as the other, except that, if so desired, it may be placed on lap, as indicated, in which position no air can escape from the brake-cylinder. When the handle points straight up the usual 15 pounds is retained, when the triple piston is forced to release position.

Q. For what special use was the Driver-Brake Retaining Valve designed?

A. For use on freight engines and those hauling long passenger or excursion trains. It furnishes a means, within the control of the engineer, by which the slack of a train may be kept bunched, if desired, when drifting up to a water crane, releasing brakes at slow speeds, and under similar conditions. This, of course, is not necesary when the engine is equipped with straight air.

Digitized by Google

Digitized by Google

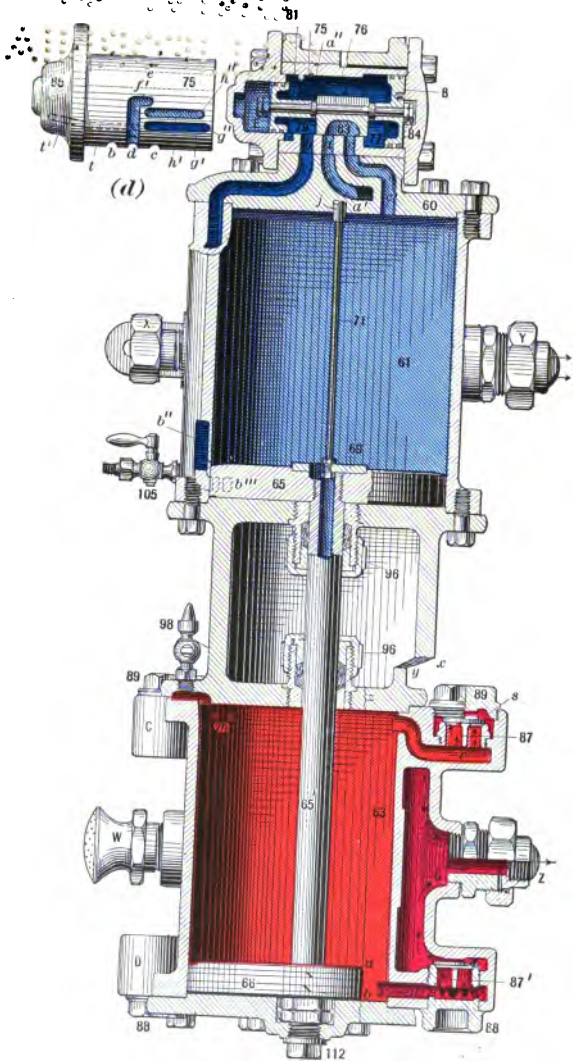

Digitized by Google

CHAPTER IV.

WESTINGHOUSE AIR PUMPS

Q. What sizes of pumps are there?

A. The 8, 9½, 11, and 8½-inch cross compound.

Q. What is the use of the pump in the air-brake system?

A. To compress the air used in applying and releasing the brakes.

Q. Which pump has been mostly used and why?

A. Two 9½-inch pumps, because the number of air cars now used in trains requires a greater capacity to insure recharging the train more quickly in descending grades. The use of two pumps also does away with an engine failure if one pump should fail.

Q. How is dry steam obtained for the pump?

A. A pipe is screwed into the dome near its top and a pump throttle conveniently located in the pipe, or a dry pipe is run from the top of the dome back through the boiler and coupled to a pump throttle screwed into the top of the boiler inside of the cab. Steam is also taken from a "fountain" conveniently located.

Q. What would happen if this dry pipe leaked inside the boiler?

A. Water would work into the pump and wash out the oil, causing the pump to groan and cut.

Digitized by Google

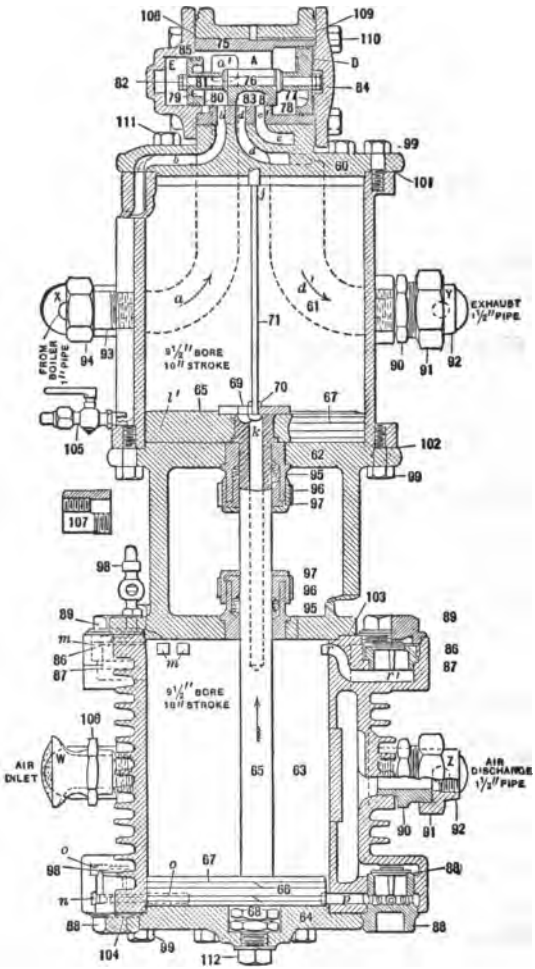

FIG. 37.—WESTINGHOUSE 9½-INCH AIR PUMP.

Digitized by Google

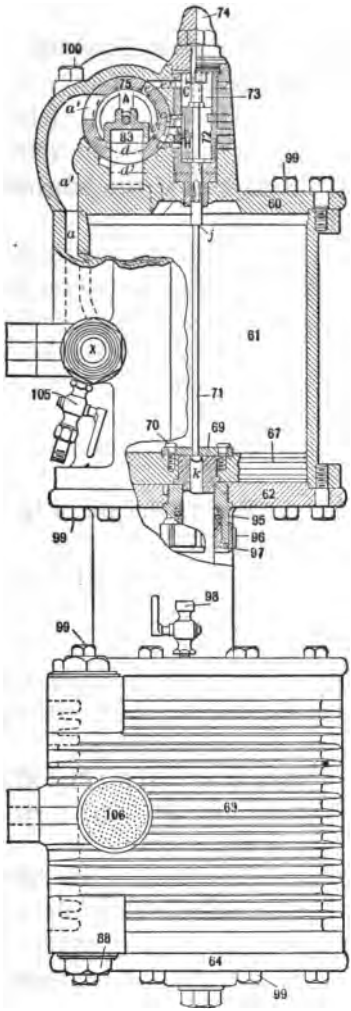

Fig. 37.—Westinghouse 9½-inch Air Pump.

Digitized by Google

Q. What is placed between the pump throttle and the pump?

A. The lubricator and pump governor.

Q. How are they located?

A. The pump governor next to the pump, and the lubricator between the governor and pump throttle.

Q. What would happen if the lubricator were placed next the pump?

A. When the pump governor shut off the steam, with the lubricator ordinarily used, the steam between the lubricator and pump governor condensing would form a vacuum that would draw all the oil from the lubricator, and there would be a great waste of oil.

9½-INCH PUMP.

Q. What is the office of the parts in the top head of the 9½-inch pump (Fig. 37)?

A. They with the reversing rod 71 form the steam valve motion of the pump.

Q. What is Fig. 37?

A. Two views of the 9½-inch pump showing the steam and air pistons and rod, and the valve motion in the top head.

Q. What are ports b, d, and c (Fig. 37)?

A. They correspond exactly to the ports in the valve seat of a locomotive.

In Fig. 37, we see that *b* leads to the bottom of the steam cylinder, *c'* to the top, and *d* leads to the exhaust pipe at *Y*.

Q. Of what use is port t (Fig. 37)?

A. It is a port by means of which chamber *E* at the left of the small piston 79 is connected with the atmosphere through port *d*.

Digitized by Google

Q. If this port were not there, would the pump reverse?

A. No; when the main valve pistons 77 and 79 moved to the left, a back pressure would be formed in chamber *E* that would stop the reversing movement of the pistons 77 and 79 and stop the pump.

Q. Explain the passage of steam after it enters the pump at X and its effect.

A. Steam coming from the boiler through the pump governor enters the pump at *X*, thence passes through ports *a*, *a'* and a^2 (Fig. 37), into chamber *A* between the main valve pistons. The area of piston 77 being so much greater than that of 79, the steam moves these pistons to the right, carrying the slide valve 83 with them to the position shown in Fig. 37. Steam in chamber *A* is now free to pass through ports *b*, *b'* and b^2 underneath the main piston 65.

Q. What would become of any steam above piston 65?

A. Any steam above this piston is free to pass to the atmosphere through ports *c*, *c'*, the exhaust cavity *B* of the slide valve, *d*, *d'*, d^2, and through the exhaust pipe from *Y*.

Q. How is the pump reversed?

A. The main piston 65 is now being forced up by the steam pressure, and just before it reaches the top of its stroke the reversing plate 69 strikes the lug *j* on the reversing rod 71, lifting the rod. As this rod is lifted the reversing slide valve 72 is carried up with it, and the pump is reversed.

Q. What is the duty of the reversing slide valve 72?

A. The duty of this valve is to admit and exhaust steam from chamber *D* between the piston 77 and head 84, and, as now shown, it exhausts steam from cavity *D* through ports *h* and *h'*, port *H* of the reversing slide valve, and through ports *f*, *f'*, *d*, *d'*, d^2, and out at *Y*.

Digitized by Google

Q. How does raising the reversing slide valve reverse the motion of the pump?

A. As the reversing valve is lifted by the rod 71, port *g* in the bushing is exposed to the steam pressure which is always in chamber *C*, which is in constant communication with chamber *A* by means of ports *e* and *e'*.

When valve 72 is raised, steam passes through port *g* into cavity *D*. We now have equal steam pressure on both sides of piston 77, and it is balanced; but the pressure acting on the right of piston 79 moves the pistons and the slide valve to the left connecting the steam pressure in chamber *A* with the top of piston 65 through ports *c'* and *c* and the under side of piston 65 is connected with the atmosphere through ports b^2, *b'*, *b*, cavity *B* of the slide valve 83, *d*, *d'*, d^2, and out at *Y*.

Q. The piston 65 is now on its down stroke; what brings the stroke to the point from which we started?

A. The reversing plate 69 strikes the button at the bottom of the reversing rod 71 and pulls the reversing slide valve 72 down to its position as shown in Fig. 37. We have now completed one entire stroke of the pump.

Q. Which are the receiving valves?

A. Those marked 86 at the left of the air cylinder.

Q. Which are the discharge valves?

A. Those marked 86 at the right of the pump.

Q. Describe the action of the air end of the pump.

A. As piston 66 is raised, the air above the piston is compressed and a vacuum would be formed underneath if air from the atmosphere did not enter through the lower receiving valve 86.

The ports are so arranged that the pressure above the piston will strike the receiving valve from above, forcing it to its seat, and the discharge valve underneath, forcing it

Digitized by Google

from its seat, allowing the compressed air to pass down and out into the main reservoir at *Z*.

The suction underneath the piston allows atmospheric pressure entering at *W* to force the lower receiving valve from its seat and fill the cylinder underneath the piston with air. The lower discharge valve 86 is held to its seat by main reservoir pressure. When the pump is reversed, the opposite valves from those just described are affected in the same way.

Q. Of what use is the port in the cap 74 which leads to the top of the stem 71?

A. This port is connected with the top end of the steam cylinder. Were it not for this port there would be a back pressure on top of stem 71 which would not allow the reversing slide valve to be raised to reverse the pump. This port is connected with the atmosphere through the top end of the steam cylinder, each time this end of the cylinder is connected with the atmosphere.

Q. What is the capacity of a 9½-inch pump in good condition?

A. With one hundred and forty pounds of steam pressure, a 9½-inch pump will compress air from zero to seventy pounds in about thirty-eight seconds in a reservoir 26½ x 34 inches, and from twenty to seventy pounds in about twenty-seven seconds. When operating at one hundred and twenty single strokes per minute, it should deliver about twenty-eight cubic feet of free air per minute against ninety pounds air pressure.

9½-INCH PUMP—PECULIARITIES, TROUBLES, CARE.

Q. What should be done in packing the pump?

A. It should be packed loosely and the gland nuts 96 screwed up only sufficient to prevent a blow. Do not use a

Digitized by Google

wrench if no blow exists when the gland is screwed up by hand.

Q. Should asbestos or anything containing much rubber be used in packing a pump?

A. No; asbestos hardens and is hard to remove, and rubber is likely to wear the stem too much.

Q. How often should the air end of the pump be oiled?

A. Modern practice demands that a pump in freight and passenger service should be oiled according to the work which they perform. The old method of oiling a pump only when it groans has been abandoned.

Q. Some pumps have been run without ever oiling the air end; how did the lower cylinder receive its lubrication?

A. From the swab which should always be placed on the piston rod, and from the oily condensation that follows down the rod.

Q. What kind of oil should be used in the air end of the pump?

A. A good quality of valve oil gives the best results. The same oil that is used in the steam cylinder also gives best results in the air cylinder.

Q. What care should be taken in starting a pump?

A. It should be started slowly so as to get a pressure of twenty or thirty pounds for the air piston to cushion upon, and the condensed steam should be gotten rid of before the pump attains any speed. Get the lubricator at work as soon as the pump is started.

Q. Does any harm result from oiling the air end of the pump through the suction?

A. Yes; the suction holes are stopped up, the air valves gummed, and a generally dirty and ineffective pump results.

Digitized by Google

Q. What trouble will cause the pump to blow?

A. Packing rings in the main steam and reversing pistons leaking, slide valve 83, or a leaky reversing slide valve 72 are the main troubles.

Q. What will cause a pump to pound?

A. It will pound if it is not fastened firmly, if the air valves are stuck, or if there is too great a lift of air valves. Sometimes it will pound if the reversing plate is worn too much to reverse the pump quickly enough, or if the nuts below the air piston are loose.

Q. What would be the effect if the top discharge valve were stuck open?

A. Main-reservoir pressure would always be on top of the air piston; this would cause a slow up-stroke and a quick down-stroke of the pump. No air would be drawn into the pump on the down-stroke. If the oil cock were opened on the pump, there would be a constant blow at that point as long as there was any pressure in the main reservoir, and no oil could be put into the air cylinder, as it would be blown out by the escaping air.

Q. What would be the effect if the bottom discharge valve were stuck open?

A. The same effect as above described, only on the opposite stroke of the pump. In this case the oil cock would not tell us anything.

Q. What would be the effect if the top discharge valve were stuck shut?

A. The pump would have a slow up-stroke, and unless the valve were forced from its seat, would stop or go slow enough to allow the pressure above the air piston to leak by the packing rings when the air pressure above the piston became as high as the steam pressure.

Digitized by Google

Q. What would be the effect if the bottom discharge valve were stuck shut?

A. The same effect as just described, but on the opposite stroke.

Q. What effect would follow if the top receiving valve were stuck open?

A. Air would be drawn into the pump on the down-stroke and forced back through the inlet port to the bottom of the air cylinder on the up-stroke. By placing the hand on the air inlet and watching the piston this trouble may be easily located. The pump would have a tendency to work faster on the up-stroke.

Q. What effect would follow if the bottom receiving valve were stuck open?

A. The same as just described, but on the opposite stroke

Q. What would be the effect were the top receiving valve stuck shut?

A. No air would be drawn into the pump on its down-stroke, and a partial vacuum being formed above the piston would cause the pump to have a slower down-stroke, as the vacuum would be working against the steam, and a faster up-stroke, as the vacuum would be working with the steam.

Q. What would be the effect if the bottom receiving valve were stuck to its seat?

A. The same as with the top receiving valve stuck shut, but on the opposite stroke.

Q. How may a stuck valve usually be loosened?

A. By tapping the valve cage lightly.

Q. How will a pump work with dirt on the seat of a discharge valve?

A. The same as with a stuck receiving valve. The dirt on the valve allows main-reservoir pressure to feed back into

Google

the pump and aid the steam on half the stroke, causing one stroke to be quick, and work against the steam on the other stroke, causing the pump to work slow.

Q. How could we tell that a receiving valve was stuck shut, or a discharge valve open, aside from the erratic action of the pump?

A. The hand placed on the strainer would feel no air drawn in on one-half of the stroke.

Q. How can we tell if the top discharge valve has a poor seat?

A. Open the cock 98 (Fig. 37) and air will issue thence constantly if the dirt on the seat of the valve allows main-reservoir pressure to feed back into the cylinder.

Q. What caused some of the first 9½-inch pumps to stop?

A. The port *g* did not extend quite far enough, and the wear of piston 77 would sometimes allow it to travel far enough to close port *g* entirely, and the pump could not be reversed.

Q. How may a pump often be started if it stops?

A. By jarring lightly on the top head.

Q. At what speed are good results obtained from a pump?

A. From forty-five to sixty double strokes a minute on a level, but in handling air trains on a grade this speed should be increased according to work to be done.

Q. Why is it best not to run a pump too slow?

A. A pump running too slow will allow the air that is being compressed to leak by the packing rings 67 and air will not be drawn in at the other end of the cylinder as it should.

With sixty strokes to the minute, a pump will make more air than with the same number of strokes spread over three

minutes. In the latter case the compressed air has too much time to leak by the air piston-packing rings.

Q. How can we tell if the packing rings in a pump are loose?

A. Have the pump working at fair speed and put the hand on the air inlet to see if the air is drawn in full stroke. Try this on both strokes, and if air is drawn in only during a part of each stroke, the rings are loose.

Q. What lift should the receiving and discharge valves have?

A. 3/32 of an inch.

Q. What will cause a pump to heat?

A. Too small lift of air valves, racing a pump, loose air piston-packing rings, using a small main reservoir on long trains, packing the piston rod too tight, or using so much oil on the air end of the pump that the pipe leading from the pump to the main reservoir is partly closed by the oil being baked to it. The pipe gradually becomes so small, that the friction caused by the air being forced through it causes the air to heat. This heat spreads to the pump.

Q. What should be done to cool a hot pump?

A. Ease up on the speed, when possible, if running fast, remove cap 74, and pour a small amount of good oil into the pump.

Q. If the packing burns out of a pump, can it still compress air?

A. Yes; the lower half of the air cylinder will not be affected.

Q. Does compressing air cause it to heat?

A. Yes; the higher the pressure the greater the degree of heat, because of the friction due to forcing the air particles closer together.

Digitized by Google

Q. What is likely to be the trouble if a pump dances?

A. A leak on the seat of the reversing slide valve or a bent reversing stem; also a burr being worn on the reversing plate, thus allowing the button on the stem to catch. Too much lubrication has also been known to cause the reversing valve to fall and the pump to reverse.

Q. How should a pump be located?

A. It should be where the engineer will notice it if it stops. Under no consideration should it be located lower than the main reservoir, as dirt and water would stay in the pump.

Q. How may a pump be cleaned?

A. By allowing a solution of lye in hot water to work through the pump. The pump should be worked slowly and the water caught in a pail before it enters the main reservoir. Run the solution through several times; then run clean hot water through to wash out the lye, or it will eat the leather gaskets throughout the brake system.

Q. Where does the exhaust pipe connected to the pump at Y lead?

A. Usually to the smoke box in the engine, but this practice is gradually giving way to the better one of running the exhaust pipe into the exhaust passage from the main cylinder to the stack. This latter method almost does away with the draught on the fire caused by the pump exhaust thus saving fuel, and the pump makes very little noise in working. Some engines are piped to carry the pump exhaust up over the cab, but this is awkward, noisy, and keeps the cab dirty.

Q. What effect would be produced if the gasket under the top head leaked?

A. If the leak were between the two ports, one leading to the top and the other to the bottom of the main piston, the pump would stop.

Digitized by Google

The accompanying table shows heat due to compression. This heat depends upon the initial temperature. The rise in temperature is due to the heat of compression.

Temperature	of	air	before	compression			60°	90°
"	"	"	compressed	to	15	lbs.	177°	212°
"	"	"	"	"	30	"	255°	294°
"	"	"	"	"	45	"	317°	362°
"	"	"	"	"	60	"	369°	417°
"	"	"	"	"	75	"	416°	465°
"	"	"	"	"	90	"	455°	507°
"	"	"	"	"	105	"	490°	545°
"	"	"	"	"	120	"	524°	580°

WESTINGHOUSE "RIGHT AND LEFT-HAND" NINE AND ONE-HALF INCH PUMP.

Q. What is the difference between the nine and one-half inch pump shown in Fig. 38 and the one shown in Fig. 37.

A. The operation of the two pumps is exactly the same; the parts are identical with the exception of the steam and exhaust connections, and the drain cock put in to drain any accumulation in port *A*.

Q. How do the steam and exhaust connections differ.

A. Both are extended through to the other side of the pump for convenience in piping in case it is desirable to locate the pump on the left side of the engine.

Q. Explain the proper use of the connections as shown in Fig. 38.

A. *A* is the steam inlet and *B* the steam exhaust.

Q. What must be done if this pump should be changed to the right side of the engine?

Digitized by Google

A. Remove plug at *C* and fittings at *A* and exchange them; the same should be done with the plug at *D* and fittings at *B*. *C* will then be the steam inlet and *D* the steam exhaust.

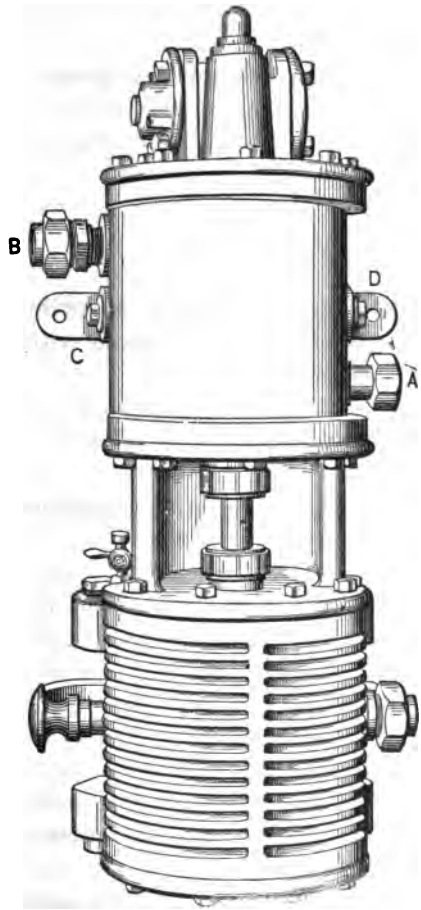

FIG. 38.—RIGHT AND LEFT-HAND PUMP.

Digitized by Google

Q. Why is this pump named compound?

A. Because in the steam end it uses the steam expansively in two cylinders, and in the air end it compounds the air in compression.

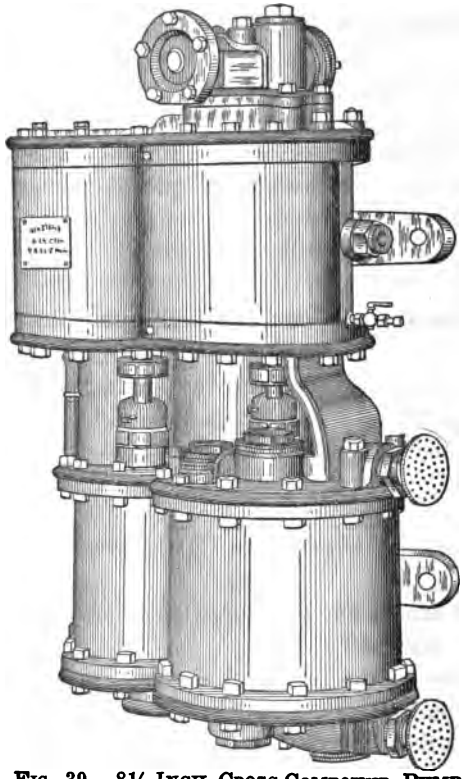

FIG. 39.—8½-INCH CROSS-COMPOUND PUMP.

Q. Is this type of pump more economical in the use of steam than the familiar types which have already been described?

A. Yes, it is more economical in steam consumption, us-

Digitized by Google

ing less than one-third the steam required by the 9½-inch pump to compress the same quantity of air.

Q. In general design and construction, how does it compare with the 9½-inch and 11-inch pumps?

A. With the exception of the number of cylinders and the type of main slide valve, it is of the same general plan.

Q. Which are the steam cylinders and which are the air?

A. The two upper cylinders are the steam and the two lower the air, this arrangement being the same as that of the other Westinghouse pumps.

Q. What are the diameters of the respective cylinders?

A. The smaller steam cylinder is 8½ inches, the larger is 14½ inches, in diameter; the smaller air cylinder is 9 inches, and the larger 14½ inches in diameter.

Q. What names are used to distinguish these cylinders?

A. The smaller cylinders are called the high-pressure steam and the high-pressure air, while the larger ones are called the low-pressure steam and the low-pressure air.

Q. How are the high and the low-pressure cylinders arranged with respect to each other?

A. The high-pressure steam cylinder is above the low-pressure air cylinder, and the low-pressure steam is above the high-pressure air cylinder.

Q. What type of reversing-valve gear is employed in this pump?

A. The same as in the 9½-inch and the 11-inch pumps.

Q. Does it operate the same?

A. Practically the same.

Q. How are the pistons and the rods connected?

A. The high-pressure steam and the low-pressure air pis-

Digitized by Google

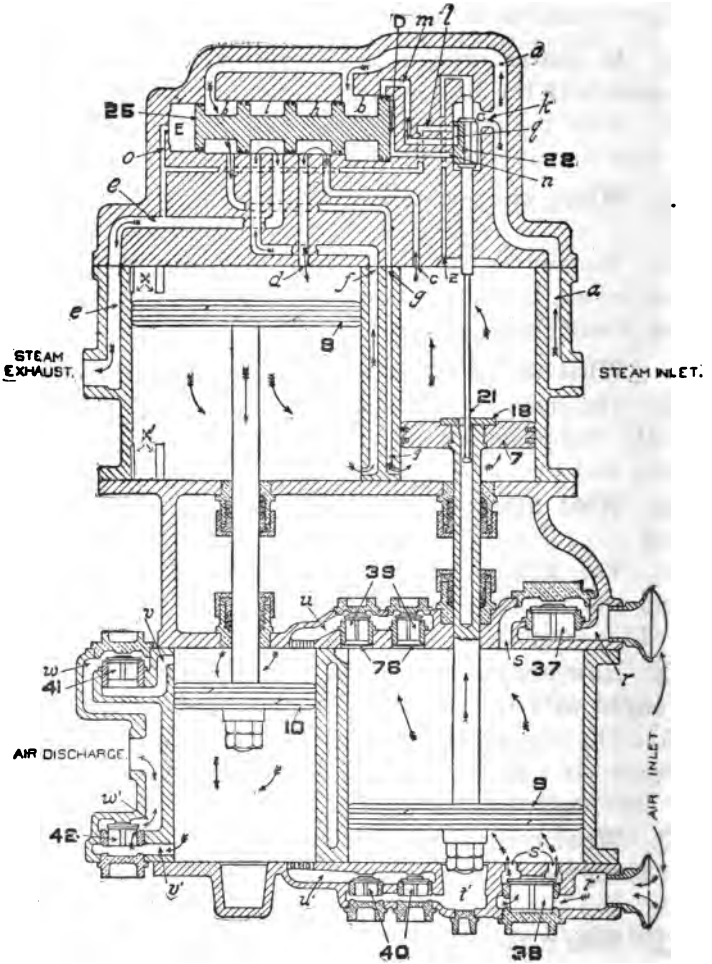

FIG. 40.—DIAGRAM OF CROSS-COMPOUND PUMP. UP STROKE HIGH-PRESSURE SIDE.

Digitized by Google

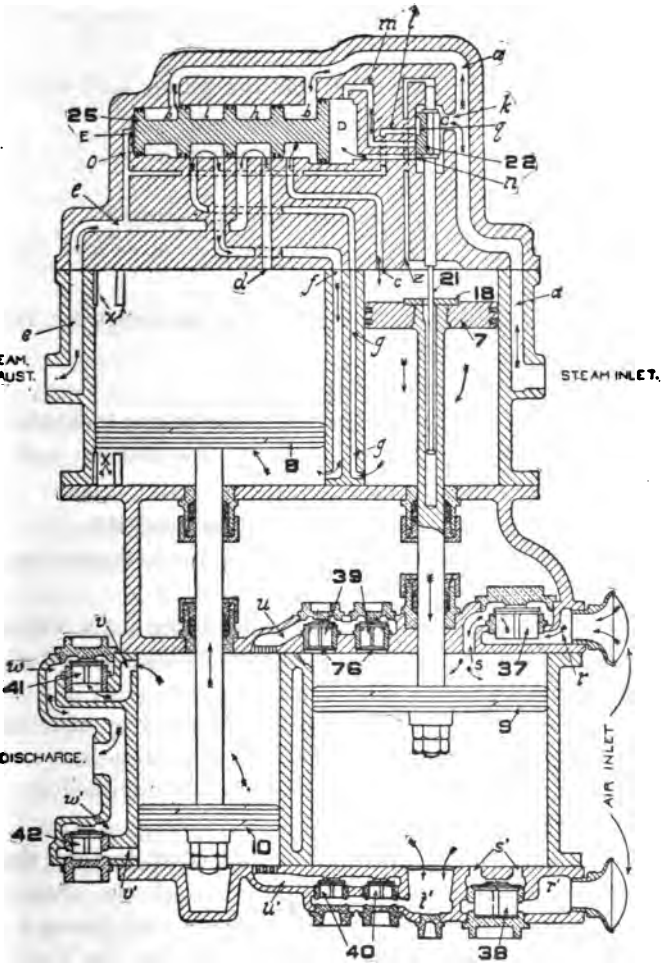

FIG. 41.—DIAGRAM OF CROSS-COMPOUND PUMP. DOWN STROKE, HIGH-PRESSURE SIDE.

Digitized by Google

tons are connected by one piston rod, and the low-pressure steam and the high-pressure air pistons are connected by the other.

Q. How many air valves has the pump, and what are they called?

A. It has ten valves; there are four receiving, four intermediate, and two discharge valves.

Q. How many air strainers has the pump?

A. Two, one for the upper receiving valves and one for the lower.

Q. In which air cylinder are the air-receiving valves located?

A. In the low-pressure air cylinder.

Q. Where are the intermediate air valves located?

A. They are located between the low-pressure and the high-pressure air cylinder.

Q. Where are the discharge valves located?

A. They are located in the ends of the high-pressure air cylinder.

Q. What is the difference between the main valve in the cross-compound and the ordinary D slide valve of the 9½-inch pump?

A. The main valve in the cross-compound is made up of five pistons connected rigidly together; a large one on one end; a small one on the other; and three intermediate pistons all the same size.

Q. What are Figs. 40 and 41, and what do they show?

A. They are diagrammatic drawings of the cross-compound pump, and show the various ports and passages and the relative positions of the various parts on the up-stroke and the down-stroke of the pistons.

Q. Explain the operation in the steam end on the up-stroke of the high-pressure steam piston.

Digitized by Google

A. Referring to Fig. 40, steam from the boiler enters the pump at the point marked "steam inlet," flows through passage *a* to the top head and fills the main valve chamber between the small and first intermediate pistons, and also between the third intermediate and large pistons. It also flows into the reversing valve chamber. The chamber *D* to the right of the large main-valve piston is connected to the exhaust through ports *m* and *l*. The small main valve piston is always connected to the exhaust through port *c*. The three intermediate pistons being equal in diameter are always balanced. The large and small pistons have steam pressure inside and exhaust outside, which results in forcing the main valve to the right to the position shown. This brings chamber *b* in register with port and passage *g* leading to the lower end of the high-pressure steam cylinders, thus providing for the admission of live steam under the high-pressure steam piston 7, starting it on its upward stroke.

Q. Where does the steam go that was used in the high-pressure steam cylinder on the previous down stroke?

A. Port *c* in the slide valve seat, which leads into the upper end of the high-pressure steam cylinder, connects through chamber *h* with port *d* in its seat, which leads into the upper end of the low-pressure cylinder, thus the steam from above the high-pressure piston exhausts through port *c*, chamber *h*, and port *d* into the upper end of the low-pressure steam cylinder, and drives the low-pressure piston on its down stroke.

Q. How is the steam in the low-pressure cylinder below piston 8 released as the piston comes down?

A. Port and passage *f* in the cylinder and top head is connected by chamber *i* with port *e* leading to the steam-exhaust pipe.

Q. Does the low-pressure piston make its down stroke as the high-pressure piston makes its up stroke?

Google

A. Yes, and *vice versa,* as the low-pressure piston makes its up stroke the high-pressure piston makes its down stroke.

Q. How is the stroke of the steam pistons reversed?

A. When the high-pressure steam piston approaches the upper end of its cylinder, the reversing plate 18 engages the shoulder on the reversing valve rod 21, forces this rod and the reversing valve 22, which is attached to it, upward to the position shown in Fig. 41. The reversing valve 22 in this position admits steam to chamber *D* outside the large piston through port *n*. This balances the large piston, and leaves the small piston alone unbalanced, having steam pressure on the right and exhaust on the left. This results in moving the main valve to the left as shown in Fig. 41. In the position shown, live steam enters the upper end of the high-pressure steam cylinder through chamber *b* and port *c* in its seat, thus causing the high-pressure steam piston to start on its down stroke. At the same time the high-pressure steam piston starts on its down stroke, the steam in the lower end of the high-pressure steam cylinder exhausts through port and passage *g* in the slide-valve seat, chamber *i*, and port and passage *f* leading to the lower end of the low-pressure steam cylinder and starts the low-pressure piston on its up stroke. The steam above piston 8 escapes to the atmosphere through port *d*, cavity *h* and port *e*.

Q. Explain the operation in the air end.

A. Commencing with the low-pressure air cylinder, it will be seen that as the low-pressure air piston is making its up stroke, it tends to form a vacuum behind it and the atmospheric pressure raises the lower air-inlet valves 38 and air flows into the cylinder past these valves, to fill the partial vacuum formed by the moving air piston. The air contained in the cylinder above the piston is compressed, as the piston advances, and is forced past the intermediate air valves 39 into the upper end of the high-pressure air cylinder above the

Digitized by Google

high-pressure piston 10. Upper air-inlet valves 37 are forced to their seat during the up stroke of the low-pressure piston, thus preventing the escape of any air back to the atmosphere. The air compressed by piston 9 on its up stroke is forced into the chamber above piston 10 and aids the steam acting downward on piston 8 to force pistons 8 and 10 downward.

On the down stroke of the high-pressure air piston 10, the air under it which was previously forced into this cylinder, by the low-pressure air piston on its down stroke, is compressed to main reservoir pressure and forced out past the lower discharge valve 42 to the air-discharge pipe and the main reservoir.

On the down stroke of the low-pressure and the up stroke of the high-pressure air pistons, the operations just explained are repeated, only the air is drawn in from the atmosphere past the upper discharge valves 37, and is discharged past lower intermediate valves 40 into the lower end of the high-pressure air cylinder, and is discharged to the main reservoir past the upper discharge valve 41 into the air-discharge pipe and main reservoir.

Q. What maximum pressure does the low-pressure air piston work against?

A. About 40 pounds.

Q. What maximum pressure does the high-pressure air piston work against?

A. Main-reservoir pressure, whatever it may be.

Q. How does the capacity of the cross-compound pump compare with that of the other air pumps?

A. When working with 200 pounds steam pressure, against a main reservoir pressure of 130 pounds it has nearly three and one-third times the capacity of the 9½-inch pump, two and one-quarter the capacity of the 11-inch pump, one and

Digitized by Google

eight-tenths the capacity of the tandem compound pump, and one and one-half times the capacity of the New York No. 5 duplex pump.

Q. Why is it that the air capacity of this pump is so much greater than that of any of the others?

A. Making due allowance for its size, its greater capacity and efficiency is due to its design which has cut down the clearance ratio to almost nothing, and because the air pistons have less difference of pressure on their two sides to work against, hence there is less packing-ring leakage encountered, and the pump runs cooler.

Q. Is the low-pressure steam piston rod solid or hollow?

A. It is solid, and this piston, together with the high-pressure air piston, is called a floating piston.

Q. Why are they called floating pistons?

A. They perform no part in reversing the pump.

Q. About how many cycles per minute should the pump speed be?

A. About 65, and with 200 pounds of steam pressure it cannot be made to run any faster.

Q. Then the pump cannot be raced?

A. No, not even against a comparatively low air pressure, and it is practically impossible to create conditions which will result in any pounding.

Q. With what steam pressures is this pump designed to operate?

A. 160 pounds, or more.

Q. How should it be started, drained, and lubricated?

A. The same general rules given for the other pumps apply in operating the compound.

Digitized by Google

The accompanying pump governor cut represents the old-style governor.

Q. What does Fig. 42 illustrate?

A. It shows a cross section of the old standard single pump governor, which has lately been superseded by the SF-4 duplex type, described on page 143. This single governor is, however, still largely used.

Q. Explain the duty of spring 41.

A. The tension of the spring 41 is regulated by the cap nut 40 and holds down the diaphragm 42, which in turn holds the small pin valve on its seat.

The fitting 45 is connected to main-reservoir pressure. When the pressure entering at 45 and acting on the under side of the diaphragm 42 is greater than the tension of the spring 41, the diaphragm is forced up, thus lifting the pin valve, from its seat.

Q. What effect does unseating this pin valve have?

A. It allows air pressure to reach the top of piston 28, (Fig. 42), forcing it down and closing valve 26.

Q. What effect does closing valve 26 have?

A. It almost shuts off the steam supply and slows down the pump, so that it operates very slowly.

Q. Why does it not entirely stop the pump?

A. A small port is drilled through valve 26, which allows a small amount of steam to pass through to the pump, thus causing it to operate slowly, thereby supplying the leakage in the brake-pipe, and preventing the possibility of the pipes freezing in severe winter weather.

Q. At the same time that air forces piston 28 down, where else does it go and with what effect?

Digitized by Google

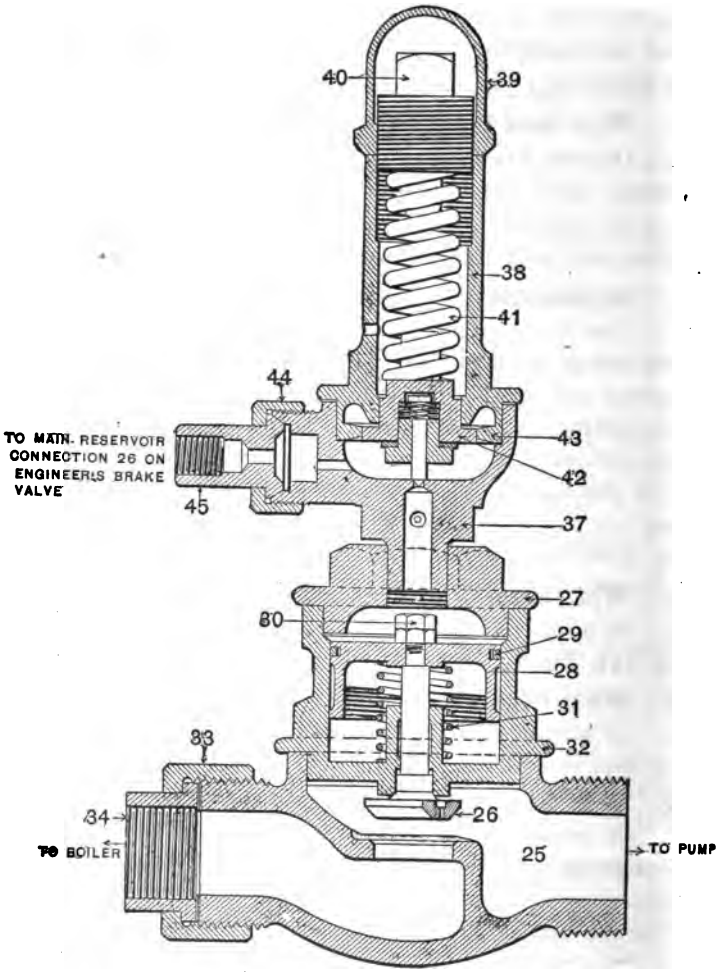

FIG. 42.—SINGLE TOP PUMP GOVERNOR.

Google

A. It passes out of the small vent port, at which the arrow 37 points, to the atmosphere.

Q. What is effected by any reduction of the main reservoir pressure?

A. Any reduction of main-reservoir pressure allows the spring 41 to force the pin valve to its seat, and what air still remains on top of piston 28 escapes through the vent port 37, and, with no pressure on top of piston 28, the spring 31 raises the piston 28 and valve 26, allowing full steam pressure from the boiler to reach the pump.

Q. Of what use is the spring under the head of the pin valve?

A. To hold the valve up when piston 43 is raised. Were it not for the spring, the pin valve would remain seated by gravity.

Q. If any air should leak by piston 28, or any steam should leak by the stem of the valve 26 into the cavity under piston 28, how would it escape?

A. There is an opening in the casing 32 connected to a drip pipe which leads to the atmosphere.

Q. What effect would be noticed if this drip pipe became clogged with dirt or were frozen shut, when there was a leakage of steam up under the governor piston?

A. Piston 28 could not be forced down, and the pump would not stop working until the main-reservoir pressure was about equal to boiler pressure.

Q. What would be the effect if the release port 37 (Fig. 42) were closed by dirt?

A. The pump would be very slow in starting to work after once stopping.

Q. Why?

A. Because, when the pin valve closed, the cavity above piston 28 would be filled with main-reservoir pressure, which

Digitized by Google

could escape only by leaking by the packing ring 29 and out to the atmosphere through the drip pipe.

Q. What effect would dirt on the seat of the pin valve have?

A. It would make a constant blow out of the vent port, and if air could leak in faster than it could get out of the vent port, the pump would either stop or work very slowly, even if the pump throttle were wide open.

Q. Why would it work slowly?

A. Because the pressure on piston 28 may force the valve 26 partly shut and allow only a small amount of steam to reach the pump. If the leak were bad enough, the pump would be stopped entirely.

Q. What effect would be noticed if the pin valve became gummed so that it would not seat centrally?

A. Air would pass down on piston 28, and the action of the pump would be the same as just described, with dirt on the seat of this valve.

Q. What would be the effect if the casing in which the governor piston works should become badly worn, and a worn ring 29 were replaced with a new one without truing the casing?

A. When piston 28 was forced down a little farther than usual, it might stick, causing the pump to stop. A jar on the governor might start the pump.

Q. Why was this type of governor superseded by the SF-4 type?

A. So as to obtain the beneficial results of the duplex main-reservoir regulation in all equipments. This arrangement is described on page 174.

Q. Is there any difference with these two governors in the principle of governing the pump?

A. No; the only difference is that the pump can be

Digitized by Google

Digitized by Google

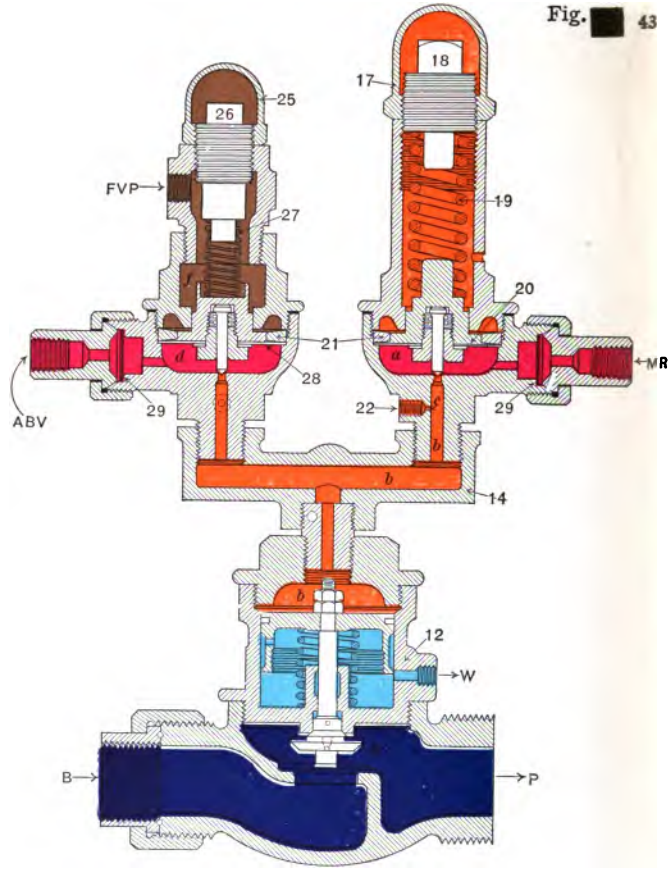

43

FIG. [redacted].—The SF-4 Pump Governor. The modified duplex pump-governor used in the No. 6 E T locomotive-brake equipment. MR—main-reservoir pipe, direct; ABV—pipe to automatic brake-valve; FVP—branch of feed valve pipe; B—steam pipe to boiler; P—connection with air pump; W—waste-pipe connection.

Copyright, 1909, by The Norman W. Henley Publishing Co.

Digitized by Google

automatically governed at two different pressures, depending on the position of the brake-valve handle.

THE PRESENT STANDARD (SF-4) PUMP GOVERNOR.

Q. What is represented in Fig. 43?

A. The new duplex pump governor, used with all present standard locomotive brake equipments.

Q. Of what does the duplex governor consist?

A. Of two pressure heads which operate in conjunction with one steam portion of the governor. The former type of duplex governor was made by unscrewing the entire pressure head from the cylinder cap 27, Fig. 42, and replacing it with a "siamese fitting," No. 14, Fig. 43, which was arranged for two pressure heads, both just alike, and placed side by side.

Q. In what respect does this SF-4 type of duplex governor differ from the former standard?

A. One of the pressure heads has two air connections and an excess-pressure regulating spring; in operation this head automatically maintains the excess-pressure for which it is adjusted, regardless of what the brake-pipe pressure may be.

Q. At what point is the additional air connection made?

A. To the side of the upper portion above the diaphragm 28.

Q. What pressure is always in the upper part of the excess-pressure head?

A. Brake-pipe pressure.

Q. What pressure is in chamber d under diaphragm 28?

A. When the handle of the automatic brake valve is in

Digitized by Google

release or running positions, main-reservoir pressure is in this chamber.

Q. When the brake-valve handle is not in running or release positions, what happens?

A. The excess-pressure head is cut out of operation, the pump then being under the control of the other pressure head.

Q. What is the other pressure head called?

A. The "maximum-pressure" head.

Q. What pressure is in chamber a under diaphragm 20, and when?

A. Main-reservoir pressure, at all times.

Q. When the brake-valve handle is in release or running positions, and main-reservoir pressure is under both diaphragms, why does not the maximum-pressure head stop the pump?

A. Because the regulation of spring 19 is for a higher pressure than is obtained in chamber *d*. This is fully explained under Duplex Main-Reservoir Regulation on page 174.

Q. Aside from the excess-pressure head and its air connection, is the SF-4 pump governor the same in construction, design and operation as the older standard duplex pump governor?

A. Yes, just the same.

Q. Should care be exercised to keep all air connections tight and all ports in and around the governor open?

A. In order to get satisfactory results all the pipe connections should be maintained perfectly tight and free from leakage, and all the vent ports should be kept open.

Q. If any of the pipe connections should leak, what would be the result?

A. A waste of air, the amount depending on the size of the leaks.

Digitized by Google

Q. How is the SF-4 pump governor adjusted to maintain the proper excess pressure?

A. By removing the cap nut on the excess-pressure top, and screwing down on the regulating screw 26 to increase excess-pressure; and by screwing up on this screw to reduce it.

Digitized by Google

CHAPTER V

MAIN RESERVOIR

Q. Where does the air go when it leaves the pump?

A. To the main reservoir.

Q. Where does main reservoir pressure begin and where end?

A. It begins where the air leaves the pump and ends at the engineer's valve.

Q. What is the object of the main reservoir?

A. Its object is to act as a storehouse in which to keep a reserve pressure to put into the brake-pipe to release brakes and recharge auxiliaries. It also acts to collect most of the dirt, oil, and moisture that leaves the pump, and condenses as the air cools.

Q. How much main reservoir pressure is usually carried?

A. Usually ninety pounds, although more is used in mountainous country, when using the High-Speed Brake, the High-Pressure Control, or the Duplex Method of Main Reservoir Regulation.

Q. What size main reservoir is considered proper?

A. One whose capacity is not less than 50,000 cubic inches for freight, and 40,000 or more for passenger engine, according to the kind of service in which the engine is placed. Best results are obtained in freight service by using a main-reservoir capacity of 70,000 cubic inches, where the trains are of considerable length.

Digitized by Google

Q. How large should any main reservoir be?

A. In releasing brakes in any service the main reservoir must be large enough so that, when the brakes are applied and we wish to release them, the main reservoir pressure will equalize with that in the brake-pipe, when connected with it, at a sufficiently high pressure to insure the prompt and certain release of the brakes.

Q. Why is a larger main reservoir necessary in freight than in passenger service?

A. Because there are a greater number of auxiliary reservoirs to charge in freight service and a longer brake-pipe to supply.

Q. When is a large main reservoir with full pressure most essential?

A. After an emergency application, and especially after a break in two.

Q. What results are likely to follow the use of small main reservoirs on engines pulling long trains?

A. The pump is likely to heat, brakes are likely to stick, we will have a hard handling rotary, and the recharge is accomplished more slowly.

Q. Why is a pump more likely to heat with a small main reservoir?

A. Because the smaller the main reservoir, the higher the pressure has to be carried, and the higher the pressure the more is heat generated in compressing the air; therefore the pump is more likely to heat and burn out the packing.

A second reason is that with a small reservoir, when releasing brakes, the pump must operate faster to charge the auxiliary-reservoirs before the speed of the train increases too much. The pump working very fast does not have time to take in a full cylinder of air each stroke; it then makes more

Digitized by Google

strokes to compress the same amount of air, than it would were it working more slowly.

Q. State the gains made by using a large main reservoir?

A. Pressure in the main reservoir and brake-pipe will equalize higher when releasing, auxiliary-reservoirs will be charged more quickly, the pump is not so likely to heat, and, not working so rapidly or against so high a pressure, will not wear out so fast, and the brakes are not so likely to stick.

Q. What should be the location of a main reservoir?

A. If possible, at the lowest point in the air-brake system.

Q. Why?

A. To have all the dirt, oil, and moisture possible drained into it and drawn off through the drain cock.

Q. Where is the main reservoir usually located?

A. On each side under the running board.

Q. Should it be located there?

A. Yes, when it is possible to place there a main reservoir of the regulation size; but the size must not be sacrificed for the position.

Q. Is it right to locate it on the tank?

A. Yes, if the requisite volume can be obtained in no other way; otherwise no.

Q. Why is it not a desirable position?

A. Oil and dirt will not drain into it as they should and when it is so located two extra lines of hose must run between the tank and engine, one to carry the air from the pump to the main reservoir, and the other to bring the pressure from the reservoir to the engineer's valve. These hose get full of oil and dirt, decay, burst, and in the end prove very expensive.

Q. How often should the main reservoir be drained?

A. At the end of each trip.

Digitized by Google

Q. Where does the water found in the main reservoir come from?

A. It is drawn from the atmosphere, and deposited as the air cools.

Q. Does any of the condensed steam from the steam

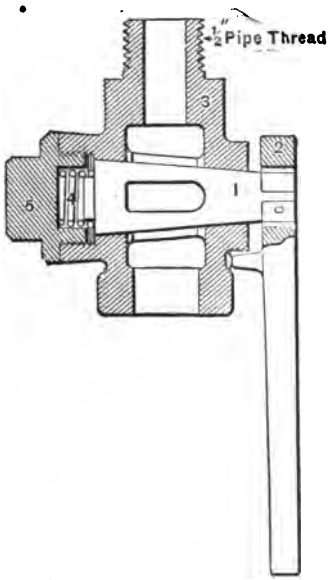

FIG. 44.—MAIN RESERVOIR DRAIN COCK.

end of the pump leak by the piston rod and then pass into the main reservoir with the compressed air?

A. A trifle; but this is an inappreciable amount compared with what comes from the atmosphere, especially on rainy days.

Q. What is generally conceded to be the best practice concerning main reservoirs?

Digitized by Google

A. To use two main-reservoirs, preferably long and of small diameter, and a cooling pipe of approximately 25 feet between the pump and first reservoir, and 25 feet between the first and second reservoirs.

Q. Why is this done?

A. Tests have shown that, with these conditions existing, air cools properly before passing the brake valve and no water is found in the brake-pipe, thus doing away with the chance of frozen brake-pipes.

The accompanying cut represents the drain cock for the main reservoir. This valve is screwed into the main reservoir, and its operation is so simple that an explanation will be unnecessary.

WESTINGHOUSE (G-6) ENGINEER'S BRAKE VALVE

Q. What was the first form of valve used?

A. That which was known as the old three-way cock.

Q. With what equipment was this used?

A. With the straight air, with the plain automatic, and for a time, by a good many roads, with the quick-action brake.

Q. What objection was there to it?

A. It was not sufficiently sensitive, and there was great danger of throwing the brakes into emergency.

Q. Why?

A. Because reductions of brake-pipe pressure were made by instinct or sense of sound. An engineer having a short train to-day and a long one to-morrow could scarcely avoid doing poor braking, as his valve was nothing much more than a plug valve. A reduction that was a trifle too heavy would

Digitized by Google

throw the triples into quick action, and on a long train the reduction could not be made too slow, or the air would blow through the leakage grooves in the brake cylinders. If the escape of air from the brake-pipe were suddenly checked, the air from the rear rushing ahead has a tendency to kick off some of the head brakes.

Q. In changing the valve what was the object?

A. To obtain a valve that would mechanically and grad-

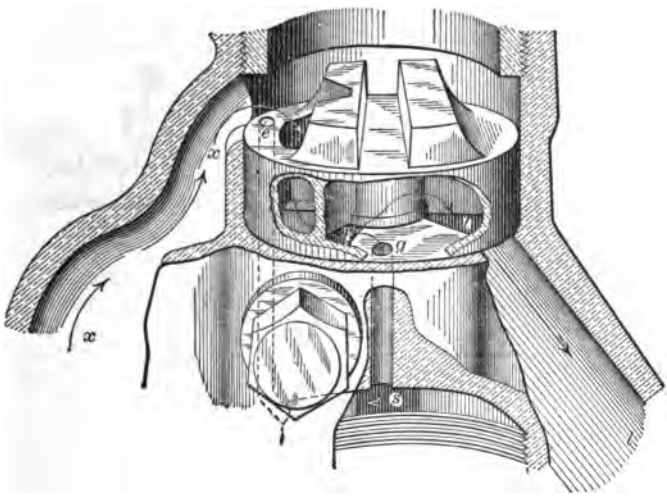

FIG. 45.—SHOWING FLOW OF AIR THROUGH BRAKE VALVE WHEN IN FULL RELEASE POSITION.

ually make the desired reduction of brake-pipe pressure, regardless of the length of the train.

Q. Explain the different parts of the engineer's brake valve.

Digitized by Google

A. *Y, T, W,* and *R* are explained by referring to Figs. 46, 47, and 48; *X* connects with the main-reservoir.

31 and 32 are known respectively as upper and lower body gasket.

14 is the rotary valve.

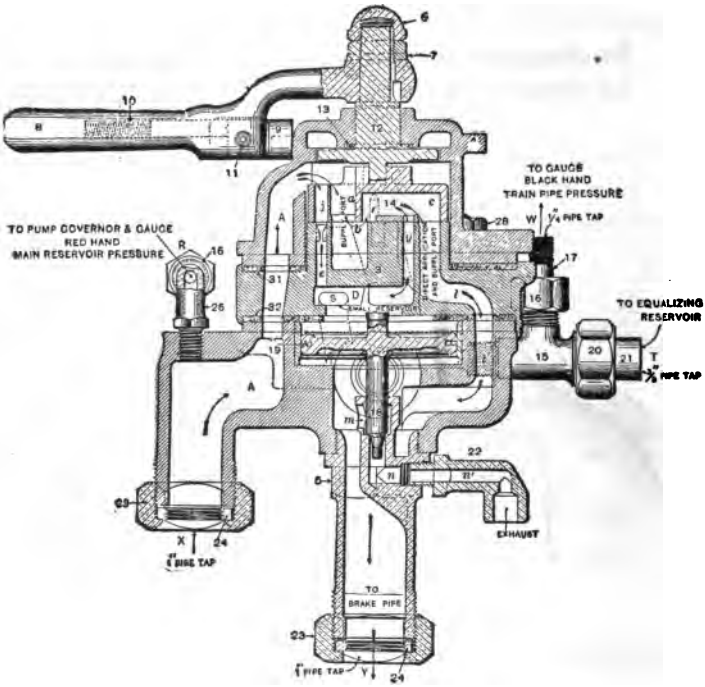

FIG. 46.—G 6 ENGINEER'S BRAKE VALVE, RELEASE POSITION.

13 a gasket to keep main-reservoir pressure from leaking to the atmosphere.

The space above piston 18 is known as cavity *D*; this cavity is connected with the little drum, or equalizing reservoir, by the pipe 21.

Digitized by Google

18 is the equalizing piston, 22 the brake-pipe exhaust.

3 is the rotary value seat, and 4 is the valve body.

There is a tee in pipe 26 just after it leaves the valve, one branch of which goes to the red hand on the gauge and the other to the pump governor.

The other parts need no naming.

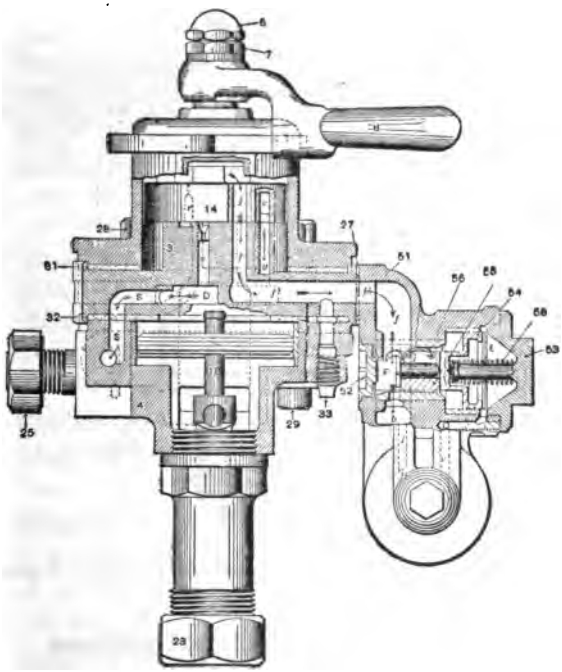

FIG. 47.—G 6 ENGINEER'S BRAKE VALVE, RUNNING POSITION.

Q. Of what use is the engineer's valve?

A. To give the engineer complete control of the flow of air.

Digitized by Google

Q. How many positions are there for the engineer's valve?

A. Five.

Q. Name them.

A. Release, running, lap, service, and emergency positions.

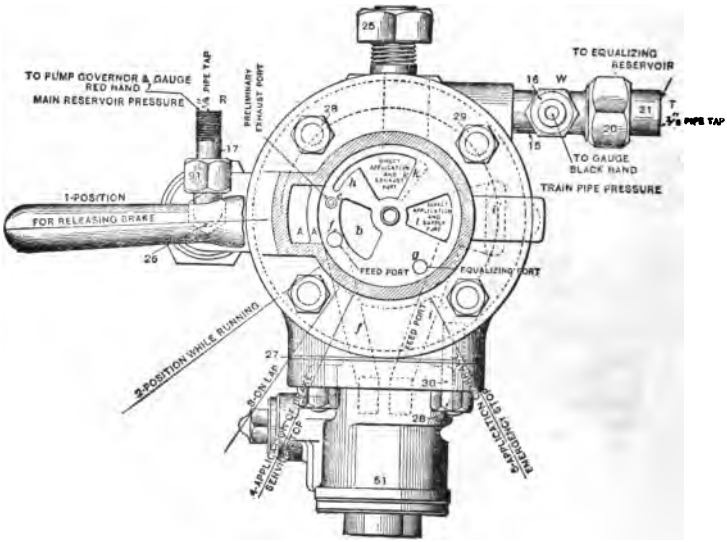

FIG. 48.—G 6 ENGINEER'S BRAKE VALVE, PLAN VIEW.

Q. Describe the use of the different positions.

A. Release is that used for releasing brakes.

Running position is the one used when running on the road and when the brakes are inoperative.

Lap position is that which blanks all ports in the valve.

Service is the position used when the brakes are to be applied gradually.

Digitized by Google

Emergency is the position used when the brakes are to be applied suddenly and with maximum power.

Q. What connections do we have with the valve in release?

A. A direct connection between the main reservoir and brake-pipe through a large port, and between the main reservoir and cavity *D*, or the little drum, through two small ports.

Q. Explain the flow of air from the main reservoir through the engineer's valve in this position.

A. In this position the main-reservoir pressure enters the valve at *X*, passes through port *A*, port *a* of the rotary 14, port *b* of the rotary seat 3 (Figs. 45, 46 and 48), up into cavity *c* of the rotary and through port *l* into the brake-pipe at *Y*. As the air passes through cavity *c* of the rotary on its way to the brake-pipe, it is free to pass through port *g* (Fig. 46) into cavity *D*. In this position, port *j* of the rotary (Fig. 51) is over port *e* in the rotary seat (Fig. 46) also leading to the little drum, or cavity *D*.

Q. Can main reservoir pressure reach the top of the rotary 14 at all times?

A. Yes.

Q. What is the valve shown in Fig. 45?

A. It is the top portion of the old D 8 Brake Valve, a cut of which is inserted to convey a better idea of the flow of air through the brake valve in release position.

Q. Does the passage of air through D 8 correspond to that of the G 6 Brake Valve in release position?

A. Although the valves are somewhat different in construction, the flow of air in release position is practically the same in both brake valves.

Q. How much main reservoir pressure is usually carried except in very mountainous country?

Digitized by Google

A. Ninety to one hundred pounds; in the description of the valve it will be considered that 90 pounds is used.

Q. How much pressure would we get in the main reservoir, the brake-pipe and the little drum, were the handle of the engineer's valve to be left in full release position until the pump stopped?

A. Ninety pounds in each, as there is a direct connection between the three.

Q. What is the small blow we hear if the engineer's valve is allowed to remain in full release?

A. It is the escape of main-reservoir pressure through the warning port of the rotary into the emergency exhaust (Fig. 48) and out to the atmosphere.

Q. What is this port and its purpose?

A. It is a port, one end of which is about as large as a pin. When the engineer hears this blow it means to him that he must be careful or he will get ninety pounds pressure in the brake-pipe if he leaves the handle of his valve in full release position too long.

Q. How much pressure is usually carried in the brake-pipe and little drum in country not mountainous?

A. Seventy pounds.

Q. How does the engineer prevent a ninety-pound pressure accumulating in the brake-pipe and little drum?

A. By moving the valve to the second, or running position.

Q. Why do we get only seventy pounds pressure in the brake-pipe with the valve in running position?

A. Because in this position all air passing into the brake-pipe from the main reservoir has to pass through the feed valve (Fig. 47), and this is adjusted to close as soon as there is a seventy-pound pressure in the brake-pipe.

Digitized by Google

Q. In running position we have the position of the rotary as shown in Fig. 47. Explain the passage of air in this position.

A. The main-reservoir pressure passes through the ports *j*, *f* and *f'* (Fig. 47 and 51) into the feed valve, or brake-pipe governor as it is more commonly called; thence through port *i* (Fig. 48) into port *l* (Figs. 46 and 48) and out into the brake-pipe at *Y*. As the pressure passes through port *l* into the brake-pipe it is also free to pass up into cavity *c* of the rotary, which is still over port *l*, as seen in Fig. 47. Port *g* is still exposed under cavity *c*, and at the same time the air passes through the brake-pipe governor into the brake-pipe, it also passes into cavity *c* of the rotary, port *g* of the rotary seat (Fig. 47) and into cavity *D*, or the little drum.

Q. The brake-pipe governor closes when there is seventy pounds in the brake-pipe with the valve in running position. How much pressure do we get in the main reservoir with the valve in this position?

A. Ninety pounds.

Q. What stops the pump when there is ninety pounds in the main reservoir?

A. The pump governor, which is connected with main-reservoir pressure at 26 (Fig. 46).

Q. Is the pump governor always set at ninety pounds?

A. No; only in level and hilly country. In mountainous country, it is set much higher, also in level country where exceptionally long trains are handled.

Q. The red hand on the gage represents main reservoir pressure, and the black hand is said to represent that on the brake-pipe. Is the pipe leading to the black hand connected directly to the brake-pipe?

A. No; it is connected to the little drum pressure. (See 21, Fig. 46.)

Digitized by Google

Q. Why is it called brake-pipe pressure if not connected to it?

A. Because in full release or running position port *g* furnishes a direct connection between the little drum and brake-pipe, and the pressures must be equal.

Q. What is the next position to the right of running position?

A. Lap position.

Q. How does the air flow with the valve in this position?

A. There is no passage of the air as all ports are blanked. The rotary is moved around sufficiently to shut off port *j* in the rotary from port *f* in the rotary seat, and a small lug on the inside rim of the rotary also covers port *g*, thus separating the brake-pipe from the little drum. In this position the main reservoir, brake-pipe and little drum pressures are each by themselves.

Q. What is the dividing line between the brake-pipe and little drum pressures in this position?

A. The equalizing piston 18 (Fig. 46).

Q. Do we still refer to the black hand as representing brake-pipe pressure on lap, knowing the ports are closed between the little drum and brake-pipe?

A. Yes.

Q. If there were a leak from the brake-pipe, would the black hand fall back if the valve is on lap?

A. Yes, but slowly.

Q. Why?

A. Because to have piston 18 work smoothly the packing ring 19 (Fig. 46) must not be absolutely tight. If the brake-pipe leaks, the little drum pressure will gradually leak by the packing ring into the brake-pipe and equalize with it.

Digitized by Google

Q. What would happen if this packing ring were tight?

A. With the valve on lap all brake-pipe pressure could leak away and the black hand on the gauge would not show it.

Q. What is the next position to the right of lap?

A. Service position.

Q. What is this position used for?

A. To make a gradual application of the brakes.

Q. Explain this position.

A. In this position, a groove *p* (Fig. 52) of the rotary connects port *e* (Fig. 48) leading to the little drum through rotary seat with a groove *h* (Fig. 48) also in the rotary seat *h* leads into the emergency exhaust *k* (Fig. 48), which is directly connected with the atmosphere as shown by the dotted lines. We then have a direct connection from the little drum to the atmosphere through small ports.

Q. What is port e called?

A. The preliminary exhaust port. This hole is bushed, and the bushing has a small taper hole through it.

Q. In what two positions is it that the preliminary exhaust port e is used?

A. In the release position and also in the service position.

Q. What is its use in the release position of the brake valve?

A. To permit main reservoir pressure to feed down into chamber D above the equalizing piston 18, as shown in Fig. 46.

Q. What is this port used for in the service position of the brake valve?

A. It is used to permit the pressure above the equalizing

Digitized by Google

piston, connected with the equalizing reservoir through port *s* to escape to the atmosphere.

Q. What effect does taking air from the little drum have?

A. It reduces the pressure on top of piston 18. The pressures were the same on both sides of it, but when the reduction is made from the little drum in service position, it leaves piston 18 with the greater pressure underneath on the brake-pipe side of the piston.

Q. What effect has this?

A. The brake-pipe pressure being greater forces piston 18 from its seat and allows brake-pipe pressure to escape to the atmosphere through the brake-pipe exhaust 22 (Fig. 46).

Q. How long does piston 18 remain off its seat?

A. Just as long as the brake-pipe pressure is greater than that in the little drum. When the little drum pressure is a trifle greater than that in the brake-pipe, piston 18 is forced to its seat.

Q. Do we still speak of the black hand as representing brake-pipe pressure?

A. Yes.

Q. How do we know it is the same as that in the little drum to which the gage pipe leading to the black hand is connected?

A. Because the equalizing piston will take the same amount of pressure from the brake-pipe before it closes that the engineer took from the little drum.

Q. If the engineer wishes to apply brakes gradually, does he take air from the brake-pipe?

A. No; he takes it from the little drum, and piston 18 takes care of the brake-pipe.

Digitized by Google

Q. To what else in the brake system is the piston 18 similar in its work?

A. The triple-valve piston.

Q. What is the next position to the right of service?

A. Emergency position.

Q. Explain this position.

A. The rotary is moved around so that the large cavity *c* (Fig. 52) is directly over the large ports *l* and *k* of the rotary seat (Fig. 48). Air passes from the brake-pipe at *l* into cavity *c* and out to the atmosphere through port *k*.

Q. What is the object of using the large ports?

A. To get a very sudden reduction in the brake-pipe to cause the triple valves to go into quick action.

Q. Is the reduction necessarily heavy to obtain quick-action.

A. No; it is quick.

Q. Does the little drum pressure or the equalizing piston play any part in the emergency application?

A. None whatever.

Q. In running position when the pump stops we have ninety pounds in the main reservoir and seventy on the brake-pipe. What is the difference between the pressure in the main reservoir and the brake-pipe called?

A. Excess pressure.

Q. What is the use of excess pressure?

A. It is a reserve pressure to throw into the brake-pipe, when the valve is placed in release position, to force the triple pistons to release position and help recharge the auxiliary reservoirs.

Q. If the pump were started with the handle of the valve on lap, how much pressure would we get in the main reservoir and how much in the brake-pipe?

Digitized by Google

A. Ninety pounds in the main reservoir and nothing in the brake-pipe.

WESTINGHOUSE SLIDE-VALVE FEED VALVE.

Q. What is the object of the Slide-Valve Feed Valve illustrated in Figs. 49 and 50?

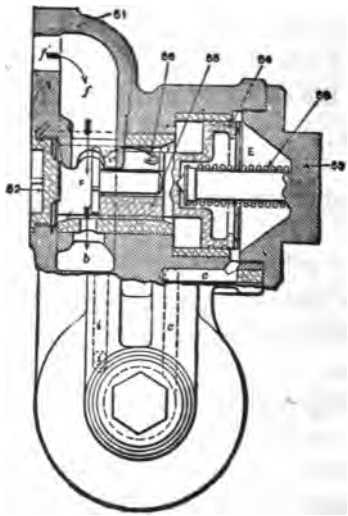

FIG. 49.—SLIDE-VALVE FEED VALVE.

A. To maintain a constant pressure in the brake-pipe, when the brake valve is in running position. It contains greater refinement of, and a more positive action than, the older form of feed valve, or train-line governor, as it is often designated. It fastens to the same studs as the old valve and is interchangeable. Fig. 49 shows a central section through the supply valve case. Fig. 50 is a central section through

Digitized by Google

the regulating valve and spring box and a transverse section through the supply valve case.

Q. Explain the operation of this valve.

A. Ports f' and i (Fig. 50) register with the corresponding ports in the brake valve body (Fig. 48); main-reservoir pressure can reach the feed valve through port f only when

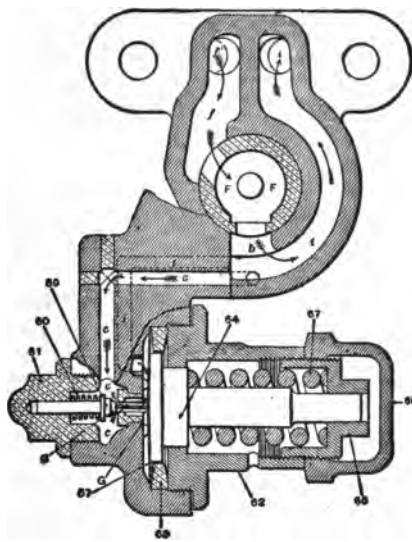

FIG. 50.—SLIDE-VALVE FEED VALVE.

the brake valve is in running position. In this position it has free access through f' and f with chamber F. Chamber E, which is separated from chamber F by the supply valve piston 54, is connected with passage i and thus with the brake-pipe through passage, c, c, port a (controlled by regulating valve 59), and chamber G over diaphragm 57. Regulating valve 59 is normally held open by diaphragm 57 and regulating spring 67, the tension of which is adjusted by regu-

lating nut 65. When this valve is unseated chamber *E* is in communication with the brake-pipe, and is subject to it's pressure.

When the handle of the brake valve is placed in running position, air pressure from the main reservoir enters chamber *F* and forces supply-valve piston 54 forward, compressing spring 58, drawing supply valve 55 with it, thus uncovering port *b*. It thereby gains entrance directly into the brake-pipe through ports *i, i*. The resulting increase of pressure in the brake-pipe (and in chamber *G* over diaphragm 57) continues until it becomes sufficient to overcome the tension by

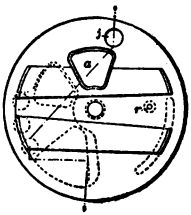

FIG. 51.—TOP VIEW OF ROTARY VALVE.

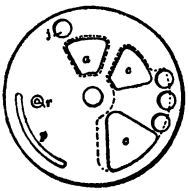

FIG. 52.—BOTTOM VIEW OF ROTARY VALVE.

regulating spring 67, previously adjusted at 70 pounds. Diaphragm 57 then yields and permits the regulating valve 59 to be seated by spring 60, closing port *a* and cutting off communication between chamber *E* and the brake-pipe. The pressures in chambers *E* and *F* now equalize quickly through leakage past supply-valve piston 54, and the supply-valve piston spring 58, previously compressed when the supply-valve was forced to the right, now reacts and forces supply-valve piston 54 and supply-valve 55 to their normal positions, closing port *b* and cutting off communication between the main reservoir and brake-pipe.

Digitized by Google

Q. What causes the feed valve to again permit main reservoir pressure to reach the brake-pipe?

A. A subsequent reduction of brake-pipe pressure, either by leakage or otherwise, reduces the pressure in chamber *G* and permits regulating spring 67 to force diaphragm 57 up, thus unseating regulating valve 59, thereby permitting the pressure accumulated in chamber *E* to discharge into the brake-pipe through ports *c, c* and *a,* chamber *G* and port *i*. The equilibrium of pressures upon the opposite faces of supply-valve piston 54, being thus destroyed, the higher main-reservoir pressure in chamber *F* again forces supply-valve piston 54, and it in turn draws the supply-valve 55 over so as to expose port *b,* which again permits the brake-pipe pressure to be restored to a pressure of 70 pounds, or other predetermined amount.

Q. How can the brake-pipe pressure be changed when using this feed valve?

A. Remove the cap 66, turn the adjusting nut 65 in, to increase brake-pipe pressure, and out to reduce it.

Q. What could be wrong if the brake-pipe pressure equalized with that in the main reservoir and this could not be changed by readjusting the tension of the regulating spring 67?

A. Aside from the causes already explained in connection with the brake valve proper, there might be a leak between ports *f′* and *i* in the gasket, between the feed valve and brake valve proper; dirt on the seat of the supply valve 55, or the regulating valve 59, or a poor seat on either; or the part of the regulating valve stem that rests upon diaphragm 57 being too long. Dirt on diaphragm 57, which would hold regulating valve 59 unseated, would produce the same result.

Digitized by Google

Q. What could make the regulating valve stem too long?

A. By grinding the valve in. After this is done it should be noted that the end of the stem is flush with the projection of the casting upon which diaphragm 57 rests.

Q. Why would dirt on the seat of the regulating valve 59 cause brake-pipe pressure to become too high?

A. With dirt on the seat of the regulating valve 59 air from chamber *E*, at the right of piston 54, could escape to the brake-pipe. If it escaped faster than main-reservoir pressure could leak by the piston 54, the pressure in chamber *E* would be less than that in chamber *F*, and the supply valve 55 and piston 54 would be moved to the right, exposing port *b*, which connects main-reservoir and brake-pipe pressures, and the brake-pipe would be overcharged.

Q. What is the object of the brass button at the end of the supply-valve piston spring 58?

A. As a spring is compressed there is a winding action set up, and a tendency for the spring to turn the piston, and the piston in turn to twist the supply valve from its seat. By the use of the button there is no chance for this action as a very slight bearing is in contact between the button and piston. The effect of the winding action of the spring on the piston is thus destroyed.

Q. Name the different parts of the slide-valve feed valve.

A. 51, the body; 52, the flush nut; 53, cap nut; 54, supply-valve piston; 55, supply valve; 56, supply-valve spring; 57, diaphragm; 58, supply-valve piston spring; 59, regulating valve; 60, regulating-valve spring; 61, regulating-valve cap nut; 62, spring box; 63, diaphragm ring; 64, diaphragm spindle; 65, adjusting nut; 66, check nut, and 67, the adjusting spring.

Digitized by Google

THE EQUALIZING RESERVOIR, OR LITTLE DRUM, OR CAVITY D.

Q. How is the little drum, or cavity D, usually spoken of?

A. As the equalizing auxiliary.

Q. Where is the little drum usually located?

A. Under the foot-boards of the cab, on either the fireman's or engineer's side, according to which has the most free space.

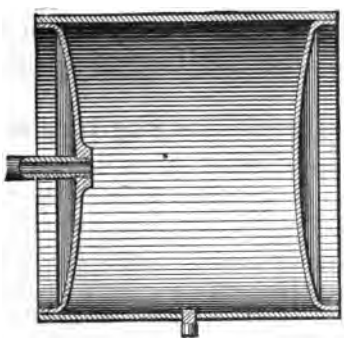

FIG. 53.—THE LITTLE DRUM, OR CAVITY D.

Q. What is the object of the little drum?

A. To furnish a volume of air on top of the equalizing piston in the engineer's valve.

Q. Would not the air in the small cavity over the equalizing piston hold air enough to keep the piston on its seat?

A. Yes; but there is not a sufficient volume there to draw from in making service reductions to make them sufficiently gradual.

Digitized by Google

Q. What would happen when the engineer put the handle of the engineer's valve in service position, if there were no little drum to furnish a volume of air on top of the equalizing piston?

A. The air would leave the top of the piston in a flash on account of the small volume, the black hand on the gauge would fall to the pin, the equalizing piston rise full stroke, all brake-pipe pressure would rush to the atmosphere through the brake-pipe exhaust, and the engineer would have lost control of the brakes.

Q. How would the brakes on the train act?

A. If a long train were coupled to the engine, the brakes would set with a full service application; but if a train of less than about six or seven cars, the brakes might go into quick-action.

Q. Why full service on a long train and quick-action on a short one?

A. On a short train, when the equalizing piston flew up, air from the brake-pipe would go to the atmosphere through the brake-pipe exhaust faster than the auxiliary-reservoir pressure could get from the auxiliary to the brake cylinder through the service port of the triple slide valve. When the auxiliary pressures were enough stronger than that on the brake-pipe, they would force out the triple pistons and compress the graduating springs, causing the triples to go into quick-action.

On a train of considerable length the brake-pipe pressure, due to the greater volume on the brake-pipe, could not get out of the brake-pipe exhaust any faster than the auxiliary-reservoir pressure could feed through the slide valves to the brake cylinders, and the auxiliary-reservoir pressures would not be strong enough to compress the graduating springs, but, losing all brake-pipe pressure, would apply the brakes in full-service application.

Digitized by Google

Q. The three-way cock was done away with to get a valve that would mechanically make a gradual brake-pipe reduction regardless of the length of the train. What is it about the valve now used that allows this to be done?

A. The little drum in conjunction with the equalizing piston.

Q. Does an engineer have to leave the handle of the engineer's valve in service position any longer to make a reduction of five pounds on a long train than cn a short one?

A. No; all little drums are of the same size. If a five-pound brake-pipe reduction is desired, the engineer releases five pounds from the little drum to the atmosphere, and the equalizing piston takes care of the brake-pipe pressure regardless of the length of the train.

Q. If by any chance the pipe leading to the little drum were broken off, could we still handle the brakes?

A. Yes.

Q. How?

A. Plug the broken pipe and also the brake-pipe exhaust. When wishing to apply the brakes in service, our service position would be of no use as the brake-pipe exhaust is plugged; so move the valve part way into emergency position, being careful not to get it too far so as to make too sudden a reduction, and when putting the valve back on lap do not stop the brake-pipe reduction too quickly or the surge of air forward may release some of the head brakes.

Q. In such a case, into what have we transformed our efficient valve?

A. Practically into an old three-way cock.

Q. How do we tell if the preliminary exhaust port e is free from gum and corrosion?

A. Place the engineer's valve in service position and

Digitized by Google

watch the black hand on the gauge. It should take about seven seconds to reduce the pressure in the standard little drum (10" x 14½", about 770 cubic inches), from seventy to fifty pounds through the preliminary exhaust port.

Q. What, besides the fact that the preliminary exhaust port is partially closed, would cause it to take longer than seven seconds to make this reduction?

A. See the engineer's valve (Fig. 46). If the gasket 32 leaked between the main reservoir and little drum, or between the brake-pipe and little drum, or if the packing ring 19 were sufficiently loose to allow brake-pipe pressure to feed by too quickly.

Q. If it takes less than seven seconds to make this reduction, what is probably the matter?

A. There is a leak somewhere in the connection to the little drum, which helps make the reduction.

PECULIARITIES AND TROUBLES OF THE G-6 BRAKE VALVE.

Q. What two troubles in the engineer's valve aside from those in the brake-pipe feed valve would not permit any excess pressure with the handle of the engineer's valve in running position?

A. A leak in the lower gasket 32 (Fig. 46) between the main reservoir and the little drum and a leaky rotary.

Q. Why does air leaking from the main reservoir to the little drum in running position not permit any excess pressure?

A. Because in this position the little drum and brake-pipe are directly connected.

Q. Does gasket 32 leak very often?

A. No; this is a trouble seldom encountered.

Digitized by Google

Q. What indications are given by such a leak?

A. In service position it would take longer to make a given reduction on the little drum, as air is feeding in slowly at the same time it is being taken out through the preliminary exhaust. As soon as the valve was placed on lap the black hand would quickly feed up to main-reservoir pressure.

Q. If the air were leaking into the little drum by gasket 32 as fast as it was being removed through the preliminary exhaust port, what would happen?

A. The equalizing piston could not be raised and the only way the brakes could be applied would be by using the emergency position.

Q. How does the leaking of the rotary do away with excess?

A. The air from the main reservoir leaks under the rotary seat directly into the brake-pipe.

Q. What harm besides that of destroying excess will result from a leaky rotary?

A. We get main-reservoir pressure in the brake-pipe and consequently in the auxiliary-reservoirs, and the use of ninety instead of seventy pounds for braking purposes would slide the wheels. After the brakes were applied and the valve was on lap, air leaking into the brake-pipe from the main reservoir would gradually increase brake-pipe pressure and force triples to release position. Without the proper excess it would also be hard to release brakes.

Q. How would you test for a leaky rotary?

A. Start the pump with the valve handle on lap. If the black hand starts, the rotary leaks. Gasket 2 leaking would also cause this, but this leak so seldom happens, it may be disregarded in practice.

Q. Give another way of testing for a leaky rotary.

A. Put the valve on lap and drain everything but the

Digitized by Google

main reservoir; open the angle cock at the rear of the tender and put the hose in a pail of water. If bubbles rise to the surface the rotary is leaking.

Q. Which is the better test?

A. The second is the more delicate test, but the first is sufficiently practical and is easier.

Q. Why should everything be drained in making the water test?

A. Because with all air taken from the brake-pipe by opening the angle cock at the rear of the tender, air leaking by the packing ring 19 in the piston 18 into the brake-pipe would cause bubbles to rise to the surface of the water. The same thing would result if air from the tender and driver brake auxiliary-reservoirs leaked by the triple-piston packing rings. The bubbles would seem to indicate a leaky rotary, while it was merely an improperly conducted test.

Q. Why can we sometimes get no excess with the valve in running position when the engine is alone, although the hands will stand properly at ninety and seventy when the engine is coupled to a train?

A. It simply means that when coupled to a train the leaks on the train compensate for the leak through the engineer's valve.

Q. What will cause a constant leak out of the brake-pipe exhaust 22 (Fig. 46), whether the valve is on full release, running, or lap position?

A. Dirt on the seat of the valve at the end of the stem of piston 18.

Q. What is the trouble if this leak does not exist in full release or running position, but begins as soon as the valve is placed on lap?

A. A leakage of little-drum pressure causes piston 18 to rise.

Digitized by Google

Q. Where could this leak be?

A. In the little drum itself; in the pipe leading to it; in the pipe leading to the black hand on the gauge; gasket 32 leaking so as to allow little-drum pressure to escape to the atmosphere; a scratch on the rotary seat between the preliminary exhaust port *e* and the groove *h* leading to the atmosphere.

Q. Why does it leak on lap and not on running or full release position?

A. Because the leak is not fed on lap, as all ports are closed, but it is in the other two positions.

Q. If the two hands on the gage do not show the same pressure when the valve is left in full release position, what is the trouble?

A. The gauge is incorrect. The main reservoir and brake-pipe being directly connected in this position both gauge hands should show the same pressure.

Q. What could be the trouble if in running position the red hand showed seventy and the black ninety pounds?

A. The gauge pipes have been connected to the wrong hands.

Q. What should be done if piston 18 does not respond readily to reductions and seems to stick?

A. The piston should be removed and cleaned; but never remove the packing ring 19, as it may be sprung or broken.

Get the ring to work free by using kerosene oil to clean it.

Q. How would you apply the brakes if the preliminary exhaust port were closed and no reduction could be made in service position?

A. Go carefully toward the emergency position; or it might be done by lapping the valve and unscrewing the

Digitized by Google

nut a little that connects the pipe leading from the little drum to the brake valve until the desired reduction was obtained.

DUPLEX MAIN-RESERVOIR REGULATION.

AS USED WITH ALL STANDARD WESTINGHOUSE EQUIPMENTS.

Q. What is the special object to be obtained with the arrangement shown in Figs. 54, 55, and 56?

A. To provide a means by which a high main-reservoir pressure can be obtained with which to release the brakes and recharge, without its being necessary for the pump to operate against this high pressure except during only such time as the brakes are applied.

Q. Of what does the duplex governor consist?

A. Of two pressure-regulating heads which operate in conjunction with one steam portion of the governor.

Q. What are the two pressure regulating heads called?

A. The shorter one is called the "excess-pressure" head; the other is called the "maximum-pressure" head.

Q. How is the governor connected to the G-6 brake valve?

A. Referring to Fig. 54, the maximum-pressure head is connected to the pipe which connects main-reservoir pressure in the brake valve to the red hand of the duplex air gauge; the lower part of the excess-pressure head is connected to a special port in the brake valve; the upper connection of the excess-pressure head is piped to the brake-pipe just below the brake valve.

Q. At what pressure is it customary to adjust the pressure heads?

A. The excess-pressure head is adjusted to stop the pump

Google

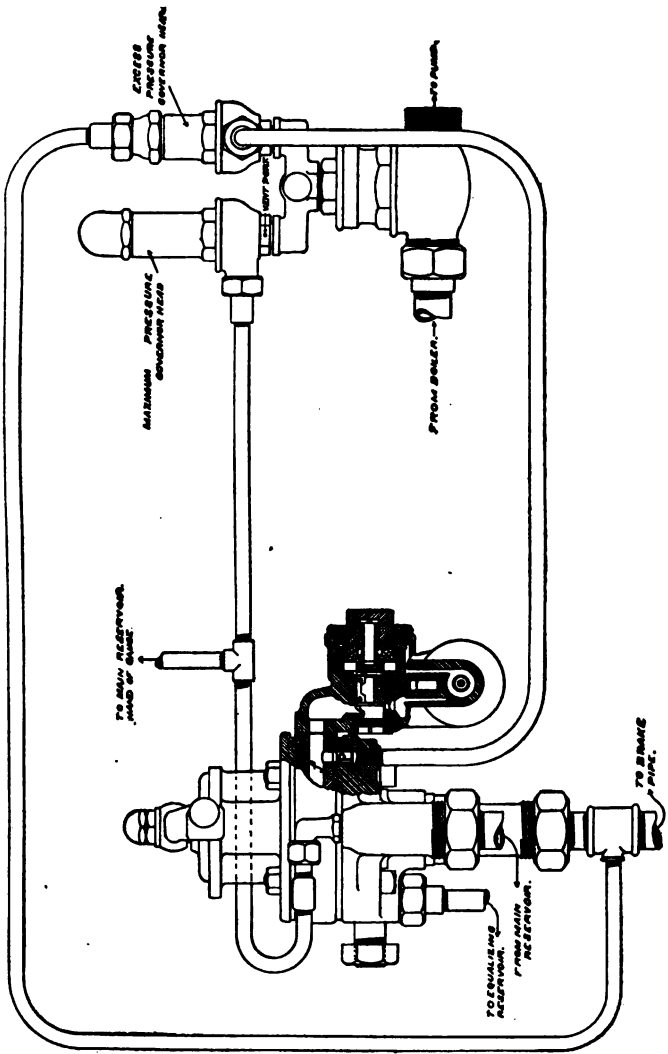

FIG. 54. DIAGRAM OF WESTINGHOUSE DUPLEX MAIN-RESERVOIR REGULATION.

Digitized by Google

when main-reservoir pressure is 20 pounds above the regulation of the feed valve, and the maximum-pressure head is adjusted at 130 or 140 pounds.

Q. If the brake valve handle is in full release or running position, how much pressure will there be in the main reservoir when the pump is stopped; if in any of the other positions what pressure results?

A. If the feed valve is set for 70 pounds, 90 pounds main-reservoir pressure is obtained when the brake valve is in release or running positions; in the other positions 130 or 140 pounds is obtained.

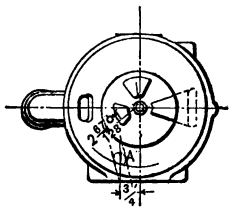

FIG. 55.

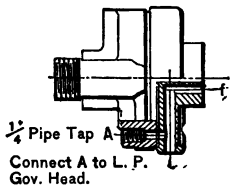

FIG. 56.

Q. What objection is there to the use of one pump governor adjusted to shut off steam from the pump when a main reservoir pressure of 140 pounds is obtained?

A. A pump operating against a high pressure continuously will wear faster and is much more likely to become overheated in freight service.

Q. Explain why the pump is stopped when the main-reservoir pressure is 20 pounds above feed-valve regulation, if the brake-valve handle is in release or running position.

A. As indicated on Fig. 54, the pipe leading to the lower part of the excess pressure head is connected at the brake valve to a hole drilled into the port, which, in running posi-

Digitized by Google

tion, conveys air to the feed valve. This port contains main-reservoir pressure, with the brake valve in this position. The upper part of the excess-pressure head, as already stated, connects with the brake-pipe below the brake valve. As soon as main-reservoir pressure reaches a point that is 20 pounds above brake-pipe pressure, the pump is stopped.

Q. Why is a higher main-reservoir pressure obtained with the brake valve in other than release and running positions?

A. When the brake-valve handle is moved toward service position, the port supplying main-reservoir pressure to the feed valve is closed, and the air which escapes at the governor vent port causes the pump to start. It will not cease operation unless the valve handle is again moved to running or release position, until sufficient pressure has been accumulated in the main reservoir to operate the maximum-pressure head, usually adjusted for 140 pounds. Air from the main reservoir enters the brake-valve as indicated and passes through pipe *A* to the maximum-pressure governor head.

Q. Are all G-6 brake-valves drilled so that the pipe from the excess-pressure head can be connected into the port leading to the feed valve?

A. All are that have been put in service recently. Figs. 55 and 56 indicate the proper location for this hole in case it is desirable to install the duplex governor in connection with the old standard equipment still using the single governor.

Digitized by Google

CHAPTER VI.

WESTINGHOUSE OLD-STYLE HIGH-SPEED BRAKES

Q. What does Fig. 57-A on page 182 represent?

A. The old-style Westinghouse High-Speed brake.

Q. Why was the introduction of the high-speed brake necessary?

A. The call by the traveling public for higher train speed rendered it necessary to insure safety of lives and property.

Q. What class of trains use this brake?

A. It is being introduced very generally in both local and through passenger train service on the principal trunk lines.

Q. What percentage of braking power to the light weight of a passenger car is generally used with the ordinary quick-action brake?

A. Eighty per cent. on 50 lbs. cylinder pressure.

Q. What percentage is used with the high-speed brake?

A. About one hundred and thirty per cent. if the cylinder pressure is figured as 86 pounds, and eighty per cent. with a 50-pound cylinder pressure. With the "L" triple and a brake-pipe pressure of 110 pounds, the percentage of braking power in emergency applications is 190.

Q. Why is it safe to use a higher braking power on wheels when the train is running fast?

A. Because the faster the wheels turn, the greater is

Digitized by Google

the inertia of the wheels, which the friction of the brake shoes has to overcome before they will cease revolving. The Westinghouse-Galton tests, made in England, in 1878, proved that the faster the tread of the wheel moved against the brake shoe, the less the friction between the two. As the speed decreases the friction increases, the friction between the wheel and the rail remaining about constant, regardless of the speed of the train.

Q. What brake-pipe and auxiliary-reservoir pressures are carried with the high-speed brake?

A. One hundred and ten pounds.

Q. At what pressure do the auxiliary-reservoir and brake cylinder equalize when the brake is fully set in emergency, using one hundred and ten pounds auxiliary-reservoir pressure?

A. About eighty-six pounds.

Q. What reduces this eighty-six pounds to sixty pounds, the safe pressure for slow speeds?

A. The automatic reducing valve shown in the accompanying cut (Fig. 57).

Q. Explain the action of the reducing valve.

A. When air is in the brake cylinder it is free to reach the top of piston 4 of the reducing valve.

As long as the tension of the spring 11 is greater than the brake-cylinder pressure on top of the piston, the slide valve 8 remains in the position shown.

When the brake is fully set, the pressure in the cylinder being greater than the tension of the spring, the piston 4 is forced down and carries the slide valve with it, thus opening port *b* into port *a*, allowing brake-cylinder pressure to escape to the atmosphere.

The apex of the triangular port *b* points up. If the slide valve 8 is drawn down a little, as in a service application, port *b* has a wide opening into port *a*, allowing cylinder pressure

Digitized by Google

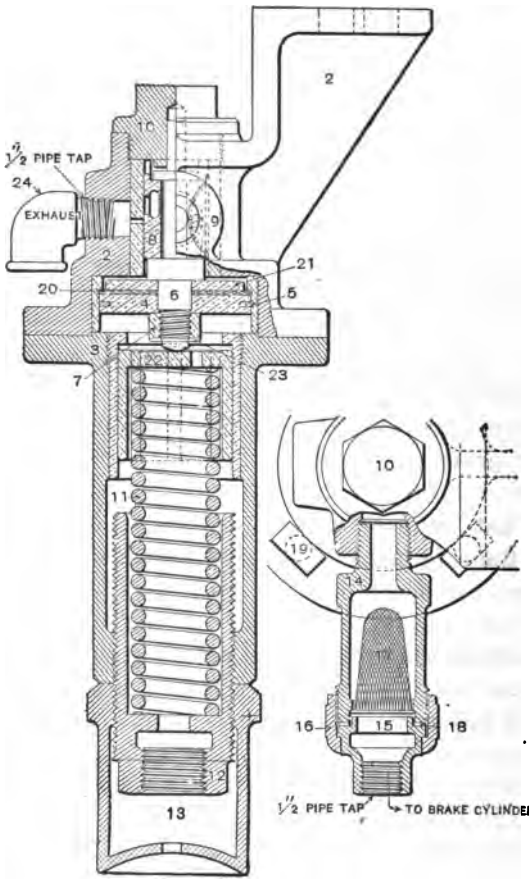

FIG. 57.—HIGH-SPEED AUTOMATIC REDUCING VALVE.

to escape quickly. The high cylinder pressure in emergency forces piston 4 down full stroke, and cylinder pressure escapes slowly through the small end of port *b*. As cylinder pressure lessens, spring 11 raises piston 4 and slide valve 8,

opening port *b* wider, thus releasing air faster; the slow exhaust ensues with a high, and quick exhaust with low train speeds. Spring 11 is adjusted to sixty pounds on passenger cars and sixty on engines and tenders.

Q. What is necessary to make a high-speed brake out of the ordinary quick-action passenger-car equipment?

A. Simply the addition of the reducing valve.

Q. What change has to be made on engines?

A. Two feed valves are used, being fastened to a *reversing-cock* which is piped to a *reversing-cock pipe bracket,* the latter replacing the feed valve on the G-6 brake value, and reducing valves are connected to the tender and driver brake cylinders. If an old style single pump governor is installed, it must be replaced by the new duplex pump governor.

Q. Why are two feed valves used?

A. Only one is used at a time. They are so arranged that the engine may be used with the "high-speed" brake or with the ordinary quick-action brake.

Q. At the same speeds, in how much less distance can a stop be made with the High-Speed than with the ordinary Quick-Action Brake?

A. About 30 per cent.

Q. With an auxiliary-reservoir pressure of 110 pounds, is a higher cylinder pressure developed than when 70 pounds is used if a 5, 10 or 15-pound service reduction of brake-pipe pressure is made?

A. With the customary piston travel of from six to eight inches the same cylinder pressure would result in either case.

Q. Would the cylinder pressure developed be the same with a gradual break-pipe reduction of 24 pounds?

A. No, the cylinder pressure would be greater when using a brake-pipe pressure of 110 pounds.

Digitized by Google

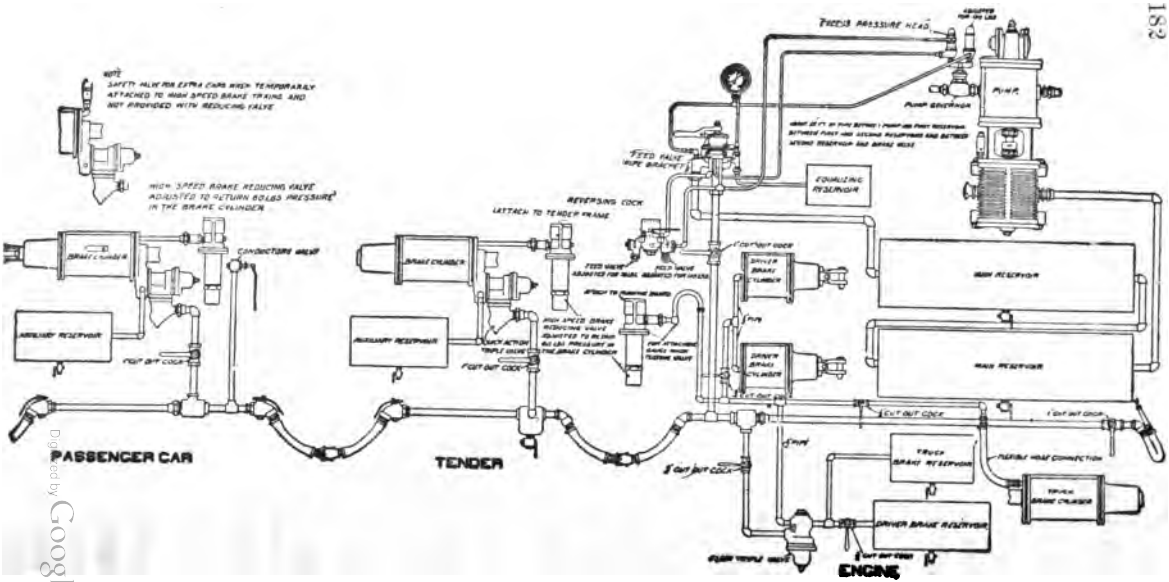

FIG. 57A.—DIAGRAMMATIC ILLUSTRATION OF OLD STYLE WESTINGHOUSE HIGH-SPEED BRAKE EQUIPMENT.

Digitized by Google

Q. Give a rule which covers this point.

A. As long as brake-pipe reductions are not continued after the equalization point between the cylinder and reservoir when the 70-pound train-line pressure has been reached, the same cylinder pressure will result in either case. If, however, the reductions are continued beyond this point, a gain is made when using the higher pressure, and it can be raised until such time as the High-Speed Reducing Valve operates to discharge air to the atmosphere.

Q. Why is it that the cylinder pressure would be the same in either case with a service reduction of 10 pounds when employing either a 70 or 110-pound pressure?

A. By making the proper calculations it will be found that in either case the same number of cubic inches of free air has passed to the brake cylinder. In other words, the same number of cubic feet of free air are used by reducing the auxiliary-reservoir pressure from 70 to 60 as from 110 to 100 pounds.

A 20-pound reduction, using a 70-pound brake-pipe pressure, would equalize the reservoir and cylinder pressures at 50 pounds with an 8-inch piston travel; using the 110-pound brake-pipe pressure and making a 20-pound reduction would give a cylinder pressure of 50 pounds, but there would still be 90 pounds in the auxiliary-reservoir; hence, with a further reduction of brake-pipe pressure the triple valve would permit more reservoir pressure to pass to the brake cylinder thus increasing its pressure.

Q. Do the brakes apply any quicker in service with the High-Speed than with the Quick-Action Brake?

A. Yes.

Q. Explain the answer to the last question.

A. On account of the higher pressure used the air passes through the ports quicker from the auxiliary reservoir to the

Digitized by Google

brake cylinder. Practically the same effect is produced as is done by increasing the boiler pressure of an engine, which added pressure produces a corresponding quickness of action.

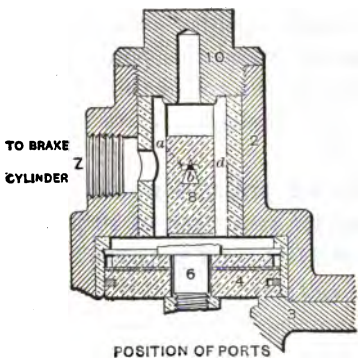

FIG. 58.

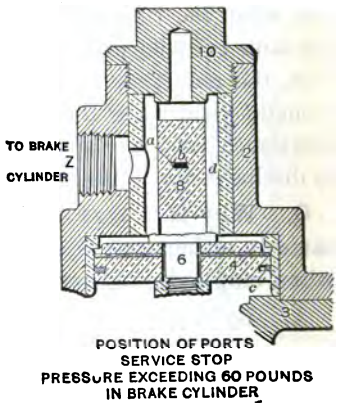

FIG. 59.

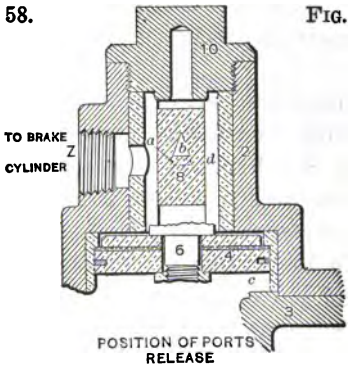

FIG. 60.

It is this quickness of action which has created the general impression that a light reduction of brake-pipe pressure produces a greater cylinder pressure when using a 110-pound instead of a 70-pound pressure. This is a mistaken idea, except as there might be a very slight difference because of

the piston moving out and closing the leakage groove quicker with the high than with the low pressure.

Q. Which method produces the best results in making station stops with the High-Speed Brake?

A. The two application method, the same as should be used when employing the 70-pound brake-pipe pressure.

Q. If, when using the 110-pound brake-pipe pressure, a sudden reduction of pressure is made and the brake-valve handle is returned to lap, at what pressure will the brake-pipe, auxiliary-reservoir and brake cylinder equalize?

A. Approximately 86 pounds.

Q. The triple valve is now in emergency position and the auxiliary-reservoir and cylinder pressures are escaping to the atmosphere through the reducing valve, which closes when the pressure in it has been depleted to 60 pounds. The brake-pipe pressure is still approximately 85 pounds; will this pressure not force the triple piston to release position and release the break entirely?

A. No; as soon as the reservoir pressure is slightly less than the brake-pipe pressure, plus the tension of the graduating spring, the triple piston is forced to lap position, in which position no more reservoir pressure can reach the brake cylinder. The reducing valve continues to reduce cylinder pressure until it closes when this pressure has reached 60 pounds.

A corresponding action takes place in response to a gradual and heavy brake-pipe reduction, sufficient to cause the reducing valve to open and the triple piston to move to emergency position and compress the graduating spring.

Q. Is the cylinder pressure reduced to 60 pounds under these conditions?

A. Yes.

Digitized by Google

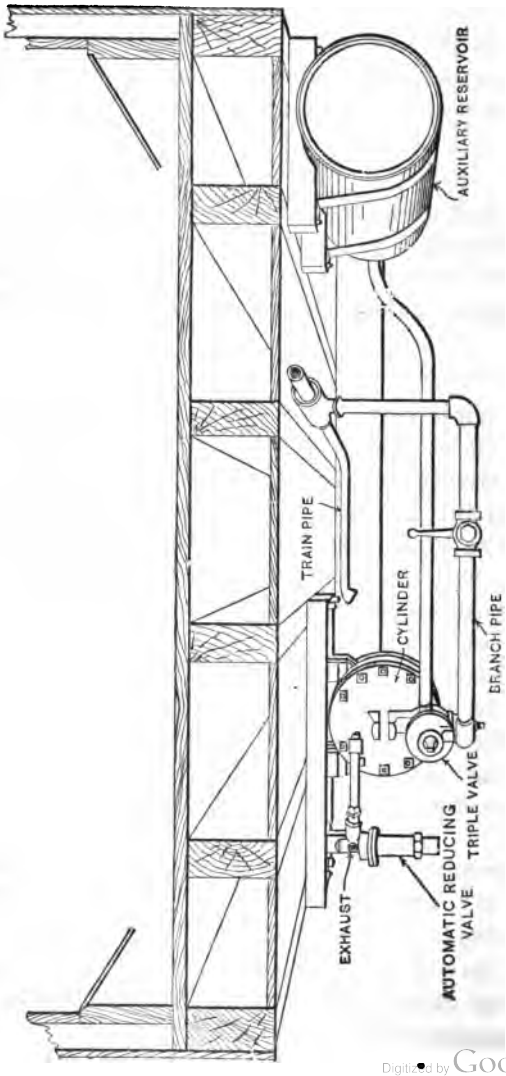

FIG. 61.—SHOWING LOCATION OF HIGH-SPEED AUTOMATIC REDUCING VALVE UNDER CAR.

Digitized by Google

Q. What is a great advantage of the High-Speed Brake other than those already outlined?

A. Two full service reductions of 20 pounds and releases can be made without requiring any recharge of the auxiliary reservoir and there will still be 70 pounds pressure available with which to stop, if necessary.

Q. How often should the High-Speed Reducing Valve be cleaned?

A. Once a year when used on cars, and once in six months when used on engines and tenders.

Q. What kind of oil should be used for lubricating purposes?

A. A high grade mineral oil.

Q. How can a High-Speed Reducing Valve be taken apart so that it can be put together without changing the adjustment of the regulating spring?

A. Do not remove the cap nut. The lower case can be removed and replaced without disturbing this part of the mechanism.

Q. If the braking power on a car is designed for 80 per cent. of its light weight when using a brake-pipe pressure of 70 pounds, what braking power will be developed with an emergency application of the High-Speed Brake at the moment of maximum cylinder pressure?

A. Approximately 130 per cent.

The cut (Fig. 62) gives an idea of the advancement in air-brake appliances. The figures represent, by scale, stops made by trains going at the same rate of speed, but equipped as indicated.

It takes about twice as far to stop a train going at forty, three times going at fifty, and about five times going at sixty miles an hour, as it does if the speed of the train is thirty miles an hour with the Quick-Action Brake.

Google

COMPARATIVE STOPS MADE WITH HIGH-SPEED AND QUICK-ACTION BRAKES.

Speed.	Stop in Feet.		Quick Action Per Cent. Less Efficient.	Feet in Favor of High-Speed Brake.
	High-Speed.	Quick Action.		
45	560	710	26.8	150
50	705	880	24.8	175
60	1060	1360	28.3	300
70	1560	2020	29.5	460
80	2240	2780	24.1	540

Brake-pipe pressure used with High-Speed Brake, 110 pounds.

Brake-pipe pressure used with Quick-Action Brake, 70 pounds.

The above table refers to stops made with chilled cast-iron wheels and soft cast-iron shoes with a train which was supposed to represent average conditions of service.

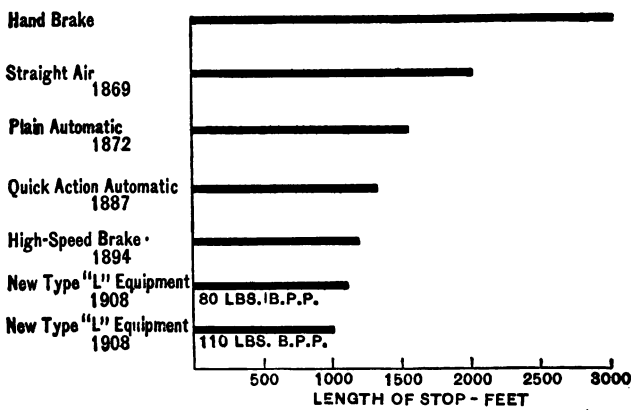

FIG. 62.—PROGRESS OF AIR BRAKE EFFICIENCY AS SHOWN BY COMPARATIVE DISTANCES IN WHICH TRAINS ARE STOPPED.

DOUBLE PRESSURE CONTROL EQUIPMENT OR SCHEDULE U.

Q. What does Fig. 62-A on page 190 represent?

A. The Double-Pressure Control or Schedule U Equipment sometimes used on freight engines.

Q. How does it differ from the old style high-speed engine equipment?

A. Instead of high-speed reducing valves, a safety valve is placed in the tender brake cylinder head, and another in the pipe between the driver-brake triple valve and cylinders.

Q. What is the object of this special equipment?

A. It is designed for special use on roads having heavy grades and handling loads, such as ore, down the grade, and empty cars up.

Q. What special advantage is gained?

A. By using two feed valves which are usually set for 70 and 90 pounds, either one of these pressures can be used in the brake-pipe and 90 or 110 pounds can be used in the main reservoir, when the brake-valve handle is in release or running positions.

Q. Would there not be danger of sliding wheels if 90 pounds were used as brake-pipe pressure?

A. Possibly if used on empty cars; but if used on heavily loaded cars, there would be no danger, as the highest possible braking power is usually 70 to 80 per cent. of the light weight of the car, and when loaded to its full capacity, the percentage of braking power, as compared with the combined weight of the car and its contents, is much smaller than this, even when using a brake-pipe pressure of 90 pounds.

Q. How much more powerful would a brake be when

Digitized by Google

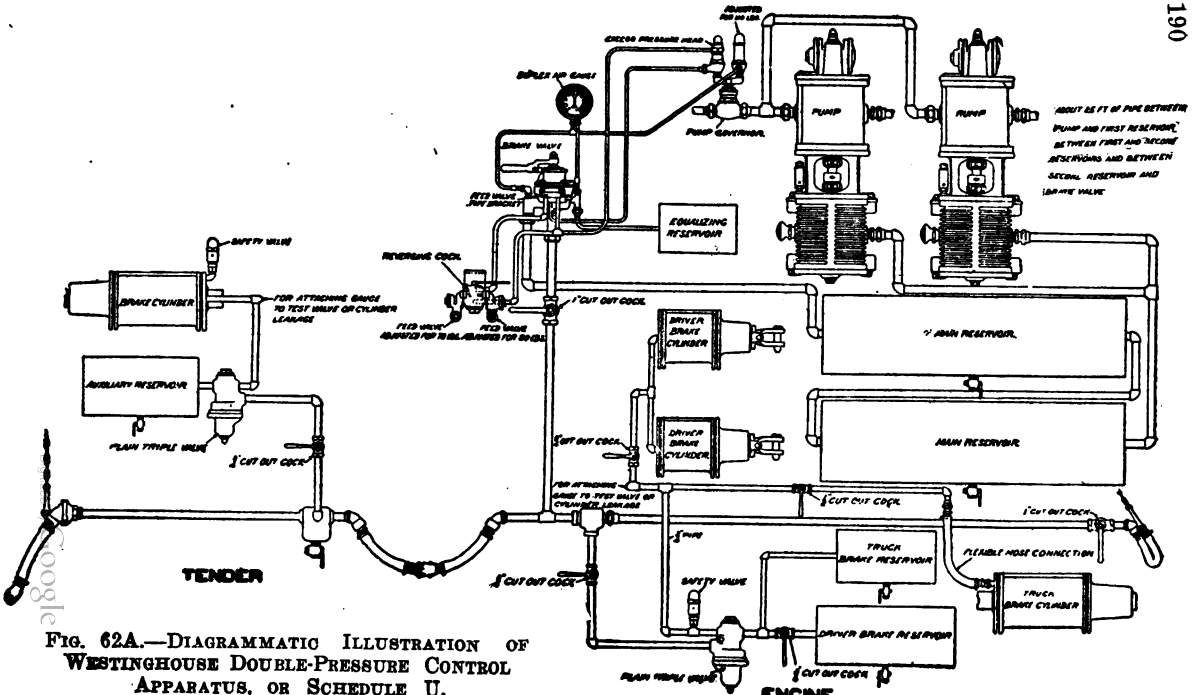

FIG. 62A.—DIAGRAMMATIC ILLUSTRATION OF WESTINGHOUSE DOUBLE-PRESSURE CONTROL APPARATUS, OR SCHEDULE U.

Digitized by Google

using a brake-pipe pressure of 90 pounds as compared with 70?

A. Approximately 25 per cent.

Q. With the cocks as shown in Fig. 62-A, which feed valve is operative?

A. The 70-pound feed valve.

Q. What benefit is derived from this device when the 70-pound feed valve is cut in?

A. With the brake valve in running position, the pump does not have to work against a higher pressure than 90 pounds, but just as soon as the brakes are applied the pump raises the pressure in the main reservoir to 110 pounds, which pressure is very helpful to insure a quick release on a long train and quickly recharge the auxiliaries.

Q. What would be done in case the cars were all heavily loaded and it was desired to use a brake-pipe pressure of 90 pounds and a minimum main-reservoir pressure of 110 pounds?

A. The reversing-cock handle would be moved so as to cut out the 70-pound feed valve and cut in the 90-pound feed valve.

Q. Would it be safe to use the 90-pound brake-pipe pressure when there were air brakes on both light and loaded cars in operation in the same train?

A. While there is a chance that a little wheel sliding might result if an emergency or very heavy service reduction were made, the likelihood of serious sliding is so slight that it is not customary to cut out empty cars and thus lose their braking power.

Q. When using a 90-pound brake-pipe pressure, is the same brake-pipe reduction necessary to apply the brakes in full as is used with a 70-pound brake-pipe pressure?

A. No; a heavier reduction would be necessary.

Google

Q. How much of a brake-pipe reduction would equalize the auxiliary-reservoir and brake-cylinder pressures, using an initial pressure of 90 pounds?

A. About 27 pounds, if the piston travel were approximately eight inches.

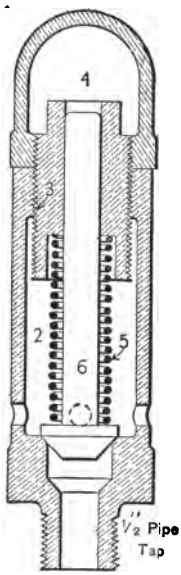

FIG. 63.—OLD STYLE SAFETY VALVE.

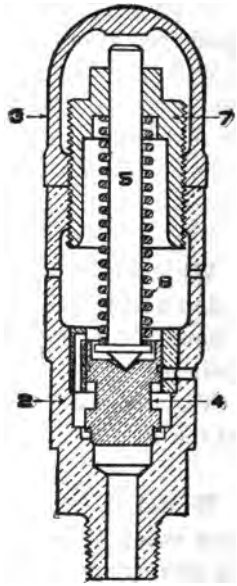

FIG. 64.—NEW STYLE SAFETY VALVE.

Q. Why are safety valves placed upon the tender, driver, and truck brakes?

A. So as to allow all pressure over 50 pounds to escape to the atmosphere. Experience shows that over-heating of tires is likely to ensue if a greater pressure than this is used on the tender, driver or truck brakes.

Digitized by Google

Q. What is best to use on the engine if the grade is very long and heavy and the speed slow?

A. A water brake. With this brake no heating of tires is produced, as the braking is done with the pistons in the main cylinders.

Q. With a brake-pipe pressure of 90 pounds, is any more braking power developed with a 5, 10 or 15-pound service reduction than if 70 pounds was carried on the brake-pipe?

A. No; no gain will be made unless brake-pipe reductions are continued after the point has been reached at which the reservoir and brake cylinder pressures would equalize when using the 70-pound brake-pipe pressure.

Q. Why is this?

A. Because, if calculated, it will be found that it requires the same number of cubic inches of free air to raise the auxiliary-reservoir pressure from 50 to 70, 70 to 90, or 200 to 220 pounds. If the same amount of air is used in each case, the same pressure would result if 20 pounds were taken from the auxiliary, when containing any pressure above 70 pounds, and put into the brake cylinder if the piston travel were not less than 8 inches.

WESTINGHOUSE OLD-STYLE COMBINED AUTOMATIC AND STRAIGHT AIR-BRAKE EQUIPMENT FOR ENGINES AND TENDERS.

Q. For what purpose was this equipment designed?

A. For use on engines and tenders in yard and freight service.

Q. Why is it necessary on yard engines with old style equipment?

A. Because an old-style triple valve will not recharge the

Digitized by Google

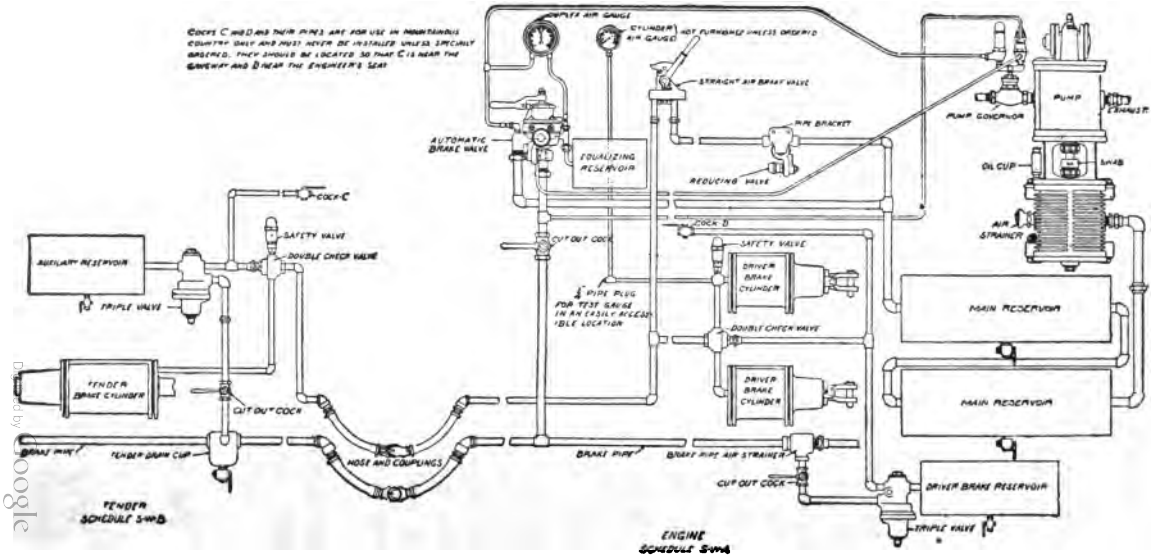

FIG. 64A.—COMBINED AUTOMATIC AND STRAIGHT AIR BRAKE EQUIPMENT AS APPLIED TO FREIGHT ENGINE AND TENDER.

Digitized by Google

auxiliary-reservoir between very frequent brake applications; as a result it is necessary for the engineer to make a great many stops with the reverse lever. Reversing an engine tends to draw cinders into the cylinders, where they cut the cylinders and packing. The brake on a switch engine should be such that it can be used as often as desirable and always have the maximum power available. Using the brake constantly also keeps the tires in much better condition. A quick release is possible with the straight air and, if desired, the brake can be partially released.

Q. Of what use is it on road engines with old style equipment?

A. Aside from the advantages stated above, while switching, it provides a means of bunching slack, permits slow-ups to be made to pick up a flag, can be used, if desired, to help retard the speed of the train while recharging on descending grades; also in slowing up at times when much braking power is not required, and where it is unnecessary to waste the air to apply the brakes on all the cars and thus put needless work upon the pump; and it can be used to meet many similar conditions encountered in road service.

Q. Does this brake operate entirely separate from the automatic, and is there no danger of obtaining too much braking power if one is used without first releasing the other?

A. Each is entirely independent of the other, and the safety valves placed in the pipes leading to the driver and tender brake cylinders will permit only the predetermined amount of pressure considered suitable for maximum braking power.

Q. What are the parts necessary to add to the standard engine and tender equipment?

A. As illustrated in Fig. 64-A, it is necessary to apply on

the engine a Slide-Valve Reducing-Valve, a ¾″ Straight-Air Brake Valve, a Safety Valve set at 53 pounds, and a double check valve. On the tender the additional parts consist of a double check valve, a safety valve set at 53 pounds, and suitable hose and connections.

Q. What is the object of the Slide-Valve Reducing Valve?

A. To reduce main-reservoir pressure to 45 pounds, that being considered proper with the straight-air brake.

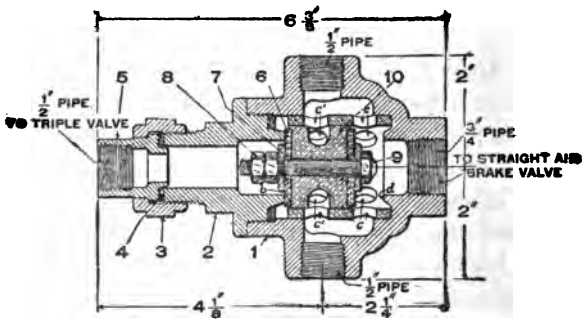

FIG. 65.—DOUBLE CHECK VALVE.

Q. What positions has the Straight-Air Valve?

A. Release, application and lap positions. In release position, cylinder pressure is exhausted directly to the atmosphere; in application position main-reservoir pressure, reduced to 45 pounds, passes through the brake valve to the double check valves and thence to the cylinders.

Q. Explain the mechanism of the double check valve (Fig. 65).

A. It consists of a double piston with a leather face on each end. When air comes from the triple valve it forces the pistons to such a position that no air can enter throu

Digitized by Google

the straight-air pipe; a set of ports is also opened to permit the air coming from the triple valve to flow to the brake cylinder. When the straight-air is used the opposite effects are produced; that is, the pistons blank the port connection to the triple valve and open a port connection from the straight-air pipe to the cylinder.

Q. What is the object of the safety valve (Fig. 64-A)?

A. If the reducing valve did not reduce the pressure properly, owing to its being in poor condition, or if the automatic brake were used without first releasing the straight-air brake, the safety valve would allow any pressure in excess of 53 pounds to escape.

Q. If the straight-air brake is left partially applied and the automatic is then applied, what will be the result?

A. Nothing unusual will be noticed until the engineer tries to release the automatic, at which time, as soon as the pressure in the pipe between the triple and double check valve is less than that between the straight-air valve and double check valve, the piston in the double check valve will move over so as to stop the escape of air through the triple and establish a connection between the straight-air valve and cylinder.

Q. How then may the brakes be released?

A. By placing the straight-air valve in release position, where it should always be when the automatic brake is in use.

Q. Where should the handle of the Engineer's Brake valve be placed when the straight-air is in use?

A. In Running Position.

Q. If the automatic brake is partially applied and the straight-air is then used, what will be the result?

A. As just described, with the opposite conditions, the brake could not be entirely released on the engine and tender

without putting the Engineer's Brake Valve of the automatic system in Running or Release Position.

The following directions, if properly followed, will produce best results:

1. Always keep both brakes cut in and ready for operation, unless failure of some part requires cutting out.

2. Always carry an excess pressure in the main reservoir, as this is necessary to insure a uniformly satisfactory operation.

3. When using automatic, keep straight-air brake valve in release position, and when using straight-air, keep the automatic valve in running position; this to avoid sticking of the driver and tender brakes.

4. Automatic must not be used while straight-air is applied; if desirous of using the automatic, first release the straight-air.

5. Though the use of straight-air while automatic is applied will not increase the driver and tender brake cylinder pressure above 45 pounds, yet release of either cannot be assured while the other brake valve is on lap or application position.

6. Bear in mind that the straight-air on the driver and tender brakes is almost as powerful as the automatic brakes on same, and that each should be used with care to avoid rough handling of the train, or in holding down long grades, loosening of tires on drivers.

7. The straight-air reducing valve should be kept adjusted to 45 pounds and the driver and tender safety valves at 53 pounds. Where a full application of the straight-air causes either or both safety valves to operate, it indicates too high adjustment of reducing valve or too low adjustment of safety valves. Have them tested and adjusted.

Digitized by Google

STRAIGHT-AIR BRAKE VALVE.

Q. What is the valve shown in Figs. 66, 67, 68, 69 and 70, and with what is it used?

A. It is known as the Straight-Air Brake Valve; it is the valve used in connection with the Combined Automatic and Straight-Air Brake.

Q. What do the different views represent?

A. Fig. 68, a side view of the outside of the valve; the

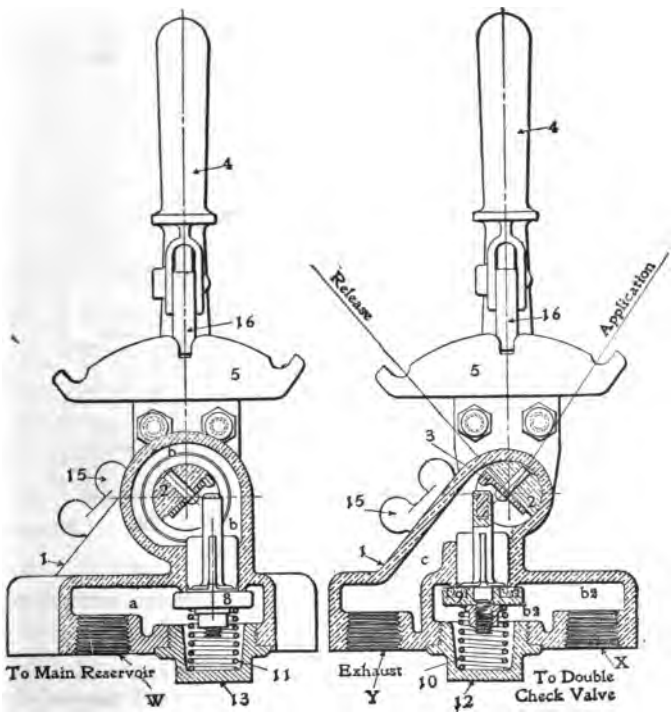

FIG. 66. FIG. 67.

STRAIGHT-AIR BRAKE VALVE.

Google

view (Fig. 70) is a horizontal cross-section through *F F* (Fig. 68); Fig. 69 is a vertical cross-section; Fig. 66, an end section showing the valve that controls the flow of pressure coming from the main reservoir; and Fig. 67 is an end

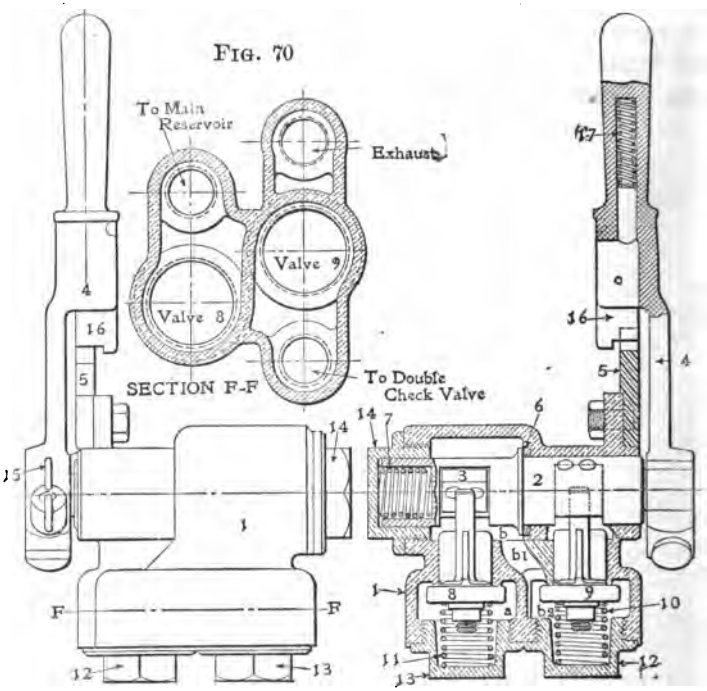

FIG. 68. FIG. 69.

STRAIGHT-AIR BRAKE VALVE.

section through a plane which permits the valve controlling the exhaust to be seen.

Q. Name the different parts of the valve.

A. 1 is the valve body; 2, the valve shaft; 3, one of the two tappet pieces held to the shaft by rivets; 4, the handle;

5, the quadrant; 6, the shaft washer, which is of leather; 7, the shaft spring, which holds the collar of the shaft against the leather washer, thus making an air-tight joint; 8, the valve which controls main reservoir pressure; 9, the one controlling the escape of air to the atmosphere from the brake cylinder; 10 and 11, the check valve springs; 12 and 13, the valve caps; 14, the shaft cap nut; 15, the handle screw; 16, the handle latch; and 17, the latch spring.

Q. The valves 8 and 9 control the flow of air through the brake valve; how are these valves controlled?

A. By the handle 4 acting through the shaft 2. As the handle is moved the shaft starts to rotate, thus causing one of the tappet pieces 3 (Figs. 66 and 67) to engage the stem of either valve 8 or 9, according to the direction in which handle 4 is moved. If moved to the right (Fig. 66) valve 8 is unseated; if moved to the left valve 9 (Fig. 67) is unseated. The shaft, as shown in Figs. 66, 67 and 69, is cut away in two places, at the bottom of each of the slots a tappet piece is fastened with two rivets.

Q. What is the object of the tappet piece?

A. The shaft could be designed to come in contact with the valve stems, but the steel tappet pieces present a better wearing surface, as do also the steel pins inserted at the top of the stems of valves 8 and 9 (Fig. 69).

Q. Where is the Straight-Air Brake Valve usually located?

A. On the side of the cab within convenient reach of the engineer. Sometimes on certain few classes of engines, it is more convenient to locate it on the boiler head.

Q. In what three positions may the handle of the valve be placed?

A. Release, application and lap.

Digitized by Google

Q. Explain these positions.

A. As shown in Fig. 67 it is on lap; moved to the right it is in application or service position; and to the left it is in release position.

Q. Can the brakes be applied gradually and released gradually with this brake valve?

A. Yes; a quick release or application is obtained when the valve handle is moved to either of the extreme positions shown. To obtain a gradual effect the handle of the valve should be moved a distance not sufficient to obtain the full movement of the valves. This can be told by the feeling when applying the brake, and by the sound as well as the feeling when making a release.

Q. What connections has the brake valve?

A. It has three and, as indicated, they connect with the main reservoir at *W*; the brake pipe, or the one leading to the double check valve, at *X* (Fig. 67); and to the exhaust at *Y*.

Q. Explain the passage of air through the brake valve when the handle is placed in application position.

A. When the valve handle is moved to the right the tappet piece in the shaft engages the stem of valve 8, forcing the valve from its seat against the pressure beneath it and the tension of spring 11. Air which comes from the main reservoir through the reducing valve (Fig. 64-A) enters the brake valve at *W* (Fig. 66) and passes up by the unseated valve 8 into chamber *b*, thence through port b^1 (Fig. 69) into chamber b^2 and out at *X* (Fig. 67) into the pipe which leads to the double check valves (Fig. 64-A), and through these valves to the brake cylinders.

Q. When the valve handle is moved to lap, after sufficient braking power has been obtained, what closes valve 8 on its seat?

Digitized by Google

A. In this position the stem of valve 8 is clear of the tappet piece attached to the shaft, and the spring 11, together with the pressure in chamber *a*, forces the valve to its seat.

Q. What part has valve 9 performed during the operations just described?

A. Spring 10 (Fig. 67), together with the pressure in chamber b^2, forces valve 9 to its seat and it thus prevents the escape of air to the atmosphere.

Q. Explain the passage of the air when the brake valve handle 4 is placed in release position.

A. Valve 9 is forced from its seat and air from the brake cylinder comes back through the double check valves (Fig. 64-A), enters at *X* (Fig. 67) into chamber b^2, passes by the unseated valve 9 into chamber *c*, thence to the atmosphere at *Y*, and thus releases the air from the brake cylinders.

Q. If the brake valve handle is left in application position how much pressure will be obtained in the brake cylinder?

A. The reducing valve between the main reservoir and brake valve is adjusted to close when the pressure between the reducing valve and brake valve is 45 pounds, hence this is the maximum pressure that can be obtained in the brake cylinders when using the straight-air brake.

Q. In what position should the brake valve handle be carried when the brake is not in use?

A. Release position; so placed any slight leakage of main-reservoir pressure by the seat of valve 8 (Fig. 66) can not creep on the brakes, since the air would escape direct to the atmosphere by the unseated valve 9.

Q. In piping this valve how may mistakes be avoided?

A. By examining the raised letters cast on the outside of the lugs into which the pipes are screwed. M. R. indicates main reservoir; EX., the exhaust, and T. P., the brake-pipe

connection, or the one through which air reaches the brake cylinders after passing through the double check valves.

PECULIARITIES AND CARE OF THE STRAIGHT-AIR BRAKE VALVE.

Q. What are the only parts in the Straight-Air Brake Valve that get out of order?

A. The rubber seats of valves 8 and 9, and the shaft washer, 6.

Q. How may the check valves 8 and 9 be removed?

A. By removing caps 12 and 13 the valves will fall out.

Q. Are valves 8 and 9 interchangeable?

A. Yes.

Q. What effect would be produced by a leak across the seat of valve 8?

A. With the brake valve in release position a constant blow would exist at the exhaust. When the brake was applied this leak would continue to apply the brakes harder.

Q. What effect would be produced by a leak across the seat of valve 9?

A. After the brake was applied and the brake-valve handle placed on lap the leak would gradually release the brake.

Q. What effect would be produced if gasket 6 (Fig. 69) formed a poor joint?

A. The bad effect of this would only be noticed during such time as the brake was applied, when air chamber *b*, connected through port b^1 and b^2 with the pipe leading to the double check valves and brake cylinders, would pass by gasket 6 and escape to the atmosphere, causing a blow at the exhaust and at the handle end of the shaft, tending to release the brake.

Digitized by Google

Q. To remove the shaft 2 for the purpose of cleaning, or for renewing gasket 6, what should first be done?

A. First remove valves 8 and 9 to avoid bending stems of these valves which, as shown in Fig. 69, extend within the circumference of the shaft 2. Next, remove the handle 4 and cap 14, and the shaft can be lifted out.

Q. In cleaning the valve what special care should be taken?

A. Not to put any oil on valves 8 and 9, or where it can work down upon the seats.

Digitized by Google

CHAPTER VII.

THE WESTINGHOUSE No. 6 ET LOCOMOTIVE BRAKE EQUIPMENT

The first Westinghouse *ET* Locomotive Brake Equipment to come into general use is now designated as the No. 5 Equipment, and was described in the 1907 edition of this book. It has since been succeeded by the No. 6 Equipment described below. The principal differences between the two equipments are mentioned at the end of this chapter, page 258.

Q. What does the symbol ET designate?

A. It designates the Westinghouse improved engine and tender, or locomotive, brake equipment, the letters *ET* being the initials of the words "Engine" and "Tender."

Q. In what respect is the ET locomotive equipment an improvement over the standard brake?

A. In that it consists of fewer parts; that is, it combines practically in one mechanism the present combined-automatic and straight-air brake; and it possesses many improved features in operation. It is easier to understand and to operate and is cheaper to maintain than the present type of combined-automatic and straight-air brake.

Q. What parts of the present combined-automatic and straight-air brake are displaced by the ET brake?

A. All triple valves, all auxiliary reservoirs, all pressure retaining valves, all high-speed reducing valves, one brake-

Digitized by Google

Digitized by Google

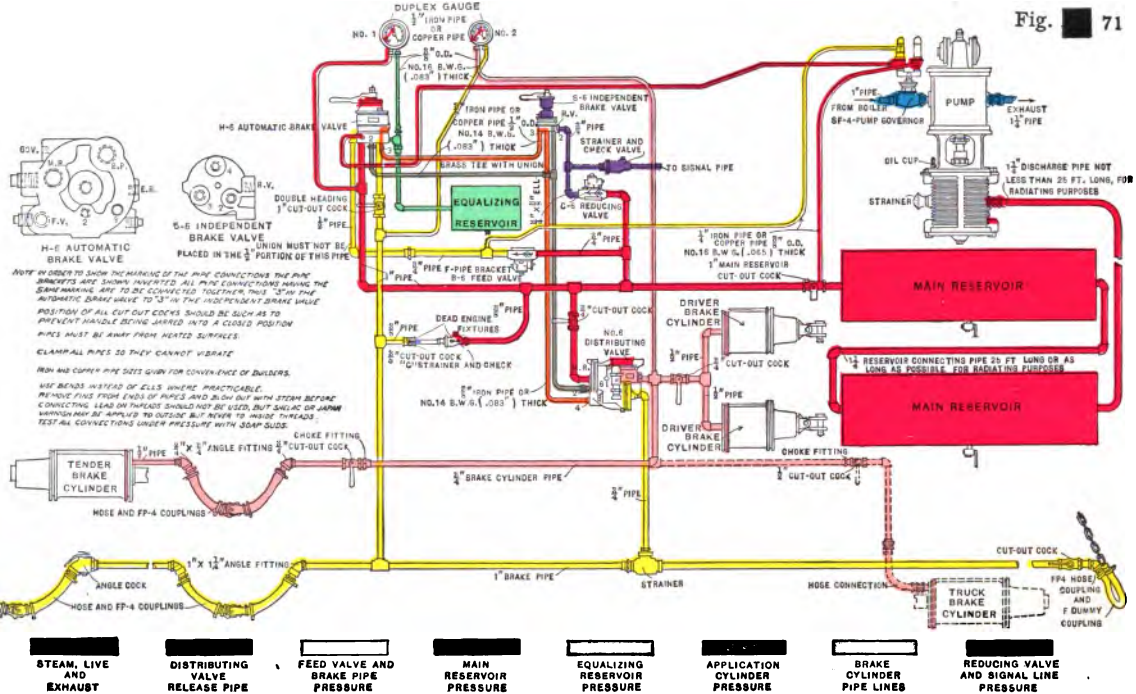

Fig. [redacted] 71—Piping Diagram, No. 6 E T Locomotive-Brake Equipment. Colors showing open communications, and routings of pressure.

Copyright, 1909, by The Norman W. Henley Publishing Co.

Digitized by Google

pipe feed valve, the reversing cock, and all double check valves.

Q. What does Fig. 71 represent?

A. It represents all the parts of the *ET* equipment, and shows the method of piping them together.

Q. What are the principal parts of the ET equipment?

A. Referring to Fig. 71, it will be seen that they are; an air pump, the main reservoirs, a main-reservoir cut-out cock, an automatic brake valve, an independent brake valve, a duplex pump governor, a distributing valve, a brake-pipe feed valve, a reducing valve, and the necessary piping, cut-out cocks, brake cylinders, brake-pipe strainers, angle cocks, and pressure gauges.

Q. Can the ET equipment be used in all kinds of service, such as high-speed passenger, in freight, and in switching without change or modification of its parts?

A. Yes; it is an equipment suitable for any kind of engine and train service, and engines equipped with it may be used in the different kinds of service without change or modification of its parts.

Q. Why is this improved equipment necessary?

A. Because of the heavier weight of all kinds of modern locomotives, greater weight and speed of passenger trains, greater length of freight trains, there is need of a more positive and more flexible brake than the present standard to control their motion. There is also need of a means of graduating at will both the application and the release of the locomotive brake as well as releasing the brakes simultaneously with, or independently of, the train brakes; this may be done with the *ET* brake.

Q. Can shorter and smoother stops be made with trains that are hauled by locomotives equipped with this brake

Digitized by Google

than can be made with those hauled by locomotives having the older type?

A. Yes; considerably shorter and smoother stops can be made. Shorter because the distributing valve automatically maintains the pressure in the brake cylinders against leakage, during an application, and smoother because of the flexibility and quick response of locomotive brakes by means of the independent brake valve, and the graduated release feature in connection with the automatic brake valve. It also gives 30 per cent. more braking power in an emergency application.

Q. What other special advantage is obtained by the use of this equipment?

A. Brakes on long freight trains may be released at slow speeds with less danger of the train being broken in two.

Q. What is the distinguishing valve of the ET equipment?

A. The distributing valve.

Q. No auxiliaries being used with the ET brake, where is the air taken from that is used in the brake cylinders to apply the brakes?

A. From the main reservoirs.

Q. Is this true both when an automatic, and when an independent application of the brakes is made?

A. Yes; with either kind of application, the air used in the brake cylinders is taken from the main reservoirs, the pressure first being reduced by a reducing valve.

Q. How are the locomotive brakes operated independently of the train brakes?

A. By the use of the independent brake valve.

Q. How are the engine and train brakes operated simultaneously?

A. By the use of the automatic brake valve.

Digitized by Google

Q. Referring to Fig. 71, what is the purpose of the main reservoir cut-out cock?

A. When necessary to remove valves to make repairs to any part of the equipment after it is charged, this cock may be closed to prevent loss of main reservoir air.

Q. Why is it that but one brake-pipe feed valve is used with this equipment?

A. Because the feed valve used has an improved regulating attachment by means of which it can readily be changed from one brake-pipe pressure to another.

Q. What is this brake-pipe feed valve called?

A. The *B*-6 feed valve.

Q. In what respect does the pump governor used with this equipment differ from the older type?

A. In that it automatically adjusts the excess pressure whenever the adjustment of the feed valve is changed from one brake-pipe pressure to another.

Q. By what name is this governor known?

A. It is designated the *SF*-4, or excess pressure governor. (See Fig. 43.)

Q. What is the purpose of the independent brake valve?

A. It enables the engineer to operate the locomotive brakes in the same manner that he does now with the straight-air brake, and it also enables him, when the automatic brake is applied, to regulate the cylinder pressure on the locomotive, or to release entirely the locomotive brakes, without effecting the train brakes.

Q. When the brakes have been applied by the use of the automatic brake valve on the lead engine, can the helper engineer release the brakes on his engine?

A. Yes; by placing the independent brake valve in release position. He can also reapply them if desired.

Digitized by Google

Q. Should the engineer after making an automatic application, entirely release the air from the brake cylinders by the use of the independent brake valve, could he again apply them independently of the automatic brake?

A. Yes.

Q. How?

A. By moving the handle of the independent brake valve to application position, admitting the desired pressure, and then moving it back to running position. It could be returned to lap position, but if this were done, the brakes on the locomotive would not release when the automatic brake valve handle was placed in running position.

Q. What should the engineer do when his engine is second, or a helper, in double-heading?

A. Close the double-heading cock in the brake-pipe under the brake valve, and leave both brake valve handles in running position.

Q. Has the engineer the means of knowing how much pressure is being put into the locomotive brake cylinders at all times?

A. Yes; the red hand of the smaller duplex air gauge in the cab shows brake-cylinder pressure at all times.

Q. What pressures do the hands of the two duplex air gauges indicate?

A. On the large gauge, the red hand shows main-reservoir pressure; the black hand shows pressure in chamber D, (this is commonly considered as representing brake-pipe pressure); on the small gauge, the red hand shows brake-cylinder pressure, and the black hand brake-pipe pressure.

Q. What is the maximum pressure that can be obtained in the brake cylinders with the independent brake valve?

A. Forty-five pounds.

Digitized by Google

Q. How is the independent-brake pressure regulated?

A. By means of the pressure reducing valve, Fig. 71.

Q. Does this pressure reducing valve serve the independent brake only?

A. No; it also does duty for the train air signal when the locomotive is equipped with the signal apparatus.

Q. What is the purpose of the combined strainer and check valve used in the signal pipe?

A. It prevents dirt and other foreign matter from getting to the check valve, causing it to leak, and the check valve prevents a back flow of air from the signal pipe to the independent brake valve while the latter is being used.

Q. If a pump should break down on the second engine, and inasmuch as the air for braking purposes is taken from the main reservoirs, could the brakes be operated on this engine?

A. Yes; the engineer could open the cut-out cock in the "dead-engine" by-pass connection, which would allow the main reservoirs to charge up from the brake-pipe.

Q. What special adjustment is necessary in case of a dead engine?

A. Owing to the fact that a dead engine is very light, due to the fire having been dumped and the water drained off, it is not good practice to use full braking pressure on the engine on account of the liability of wheel sliding. To prevent this, the safety valve on the distributing valve should have its adjustment reduced to 25 pounds, thus limiting brake-cylinder pressure to this amount.

Q. What is the dead-engine by-pass connection?

A. It is a by-pass by means of which the main reservoirs can be charged through a cut-out cock and a combined air strainer and check valve, the latter having a choke which regulates the flow of air from the brake-pipe at a speed such

that the air taken from it would not act to apply the train brakes while the main reservoirs are charging. The check valve prevents air flowing back to the brake-pipe when a reduction is made to apply the brakes, and the strainer prevents dirt from lodging in the check valve and causing it to leak. The cut-out cock must be closed when this connection is not being used.

BRAKE VALVES FOR ET EQUIPMENT.

H-6 AUTOMATIC BRAKE VALVE.

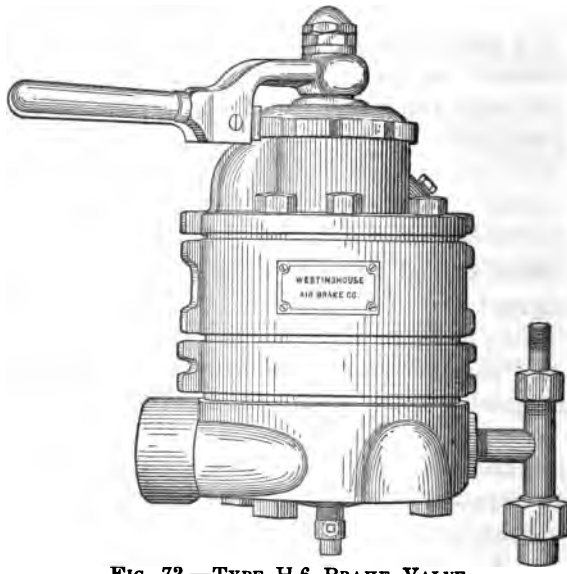

FIG. 72.—TYPE H-6 BRAKE VALVE.

Q. How many positions has the H-6 automatic brake-valve handle?

A. Six.

Digitized by Google

Digitized by Google

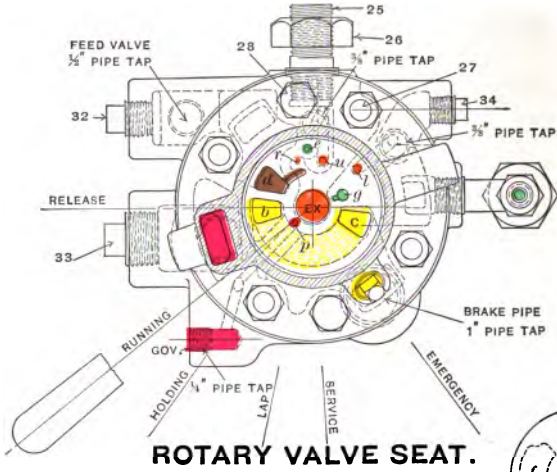

ROTARY VALVE SEAT.

TRANSPARENT PLAN OF ROTARY VALVE.

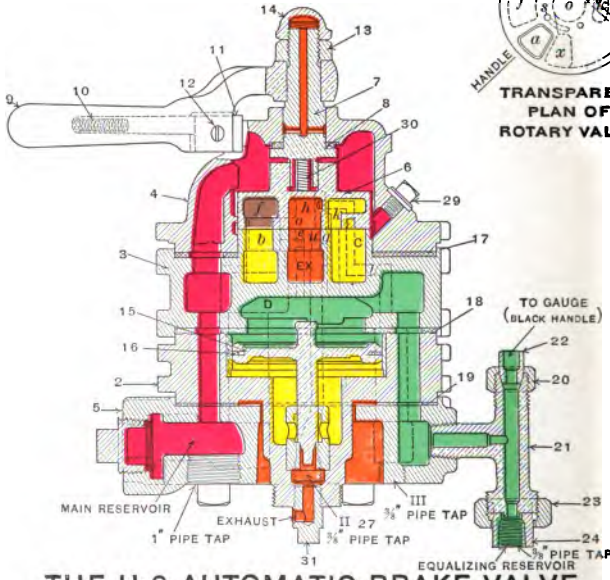

THE H-6 AUTOMATIC BRAKE VALVE.

RUNNING POSITION

MAIN RESERVOIR PRESSURE	ATMOSPHERIC	BRAKE PIPE PRESSURE	EQUALIZING RESERVOIR PRESSURE	FEED VALVE PIPE PRESSURE

Digitized by Google

Copyright, 1909, by The Norman W. Henley Publishing Co.

Q. Name them.

A. They are release, running, holding (see Fig. 74), lap, service application, and emergency application positions.

Q. What is the purpose of each?

A. With the exception of release and locomotive brake holding, they are the same as the corresponding positions on the *G*-6 brake valve which have already been described in the first part of the book.

In release position the train brakes can be released but not the locomotive brakes, and moving the handle back and forth between driver brake holding and running, or between release and running position, the locomotive brakes can be graduated off after the train brakes are released or while they are releasing. Locomotive brake holding position, as its name implies, is for the purpose of holding these brakes applied until it is desired to release them. In this position the feed valve controls brake-pipe pressure.

Q. What are the advantages of holding position?

A. When releasing brakes on long freight trains the slack may be held bunched, thus preventing a break-in-two, especially when release is made at low speed. This may also be done by leaving the brake-valve handle in release position; the handle may be moved to holding position to avoid overcharging. With passenger trains, smoother and more accurate stops can be made, because train brakes may be released just before stopping, and locomotive brakes graduated off afterward.

Q. When the handle of the H-6 brake valve is placed in emergency position is any additional braking power obtained in the locomotive brake cylinders?

A. Yes; about 30 per cent.

Q. Explain this.

A. When the handle is placed in emergency position,

Google

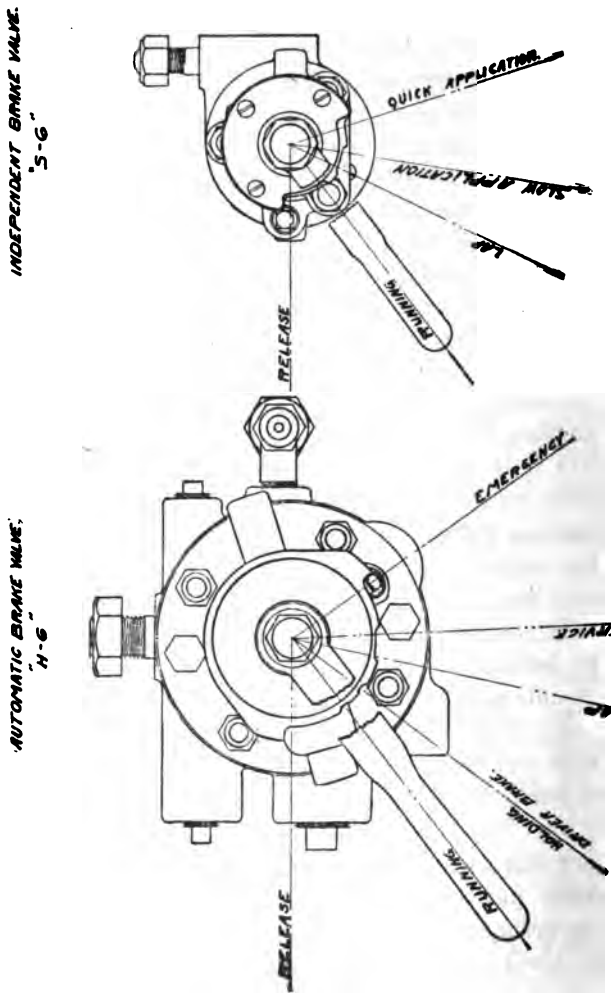

FIG. 74.—BRAKE VALVES—POSITIONS OF HANDLES.

Digitized by Google

main-reservoir pressure feeds through the brake-valve into the application-cylinder pipe, and thence to the application-cylinder of the distributing valve, raising the pressure therein to an amount slightly above the adjustment of the safety valve.

Q. What are the advantages of this increased pressure?

A. It helps to make a shorter stop, and effectually prevents possibility of the engine breaking away from the train in emergency applications.

Q. With what type of equipment is this brake valve (Fig. 72) used?

A. With the ET engine and tender brake equipment.

Q. Is its principle of operation any different from that of the G-6 brake valve, already described?

A. No, it is designed on practically the same lines.

Q. In what particulars does it differ from the G-6 brake valve?

A. First, in that it has a permanent base to which it is bolted, rendering it unnecessary to disturb any pipe joints whenever it is necessary to remove it for cleaning and repairs; second, in that it has, in addition to the same positions for the handle, one more position known as the holding in which the locomotive brakes are held applied while the train brakes are releasing; third, that the service exhaust is made at the center of the rotary instead of the side; fourth, that in release position the engine and tender brakes are held applied; fifth, in emergency application position it feeds main-reservoir pressure into the application-cylinder of the distributing valve, thus increasing the pressure in the latter and hence in the brake cylinders, about thirty per cent; sixth, it has a feed-valve pipe connection; seventh, a distributing-valve-release pipe connection.

Digitized by Google

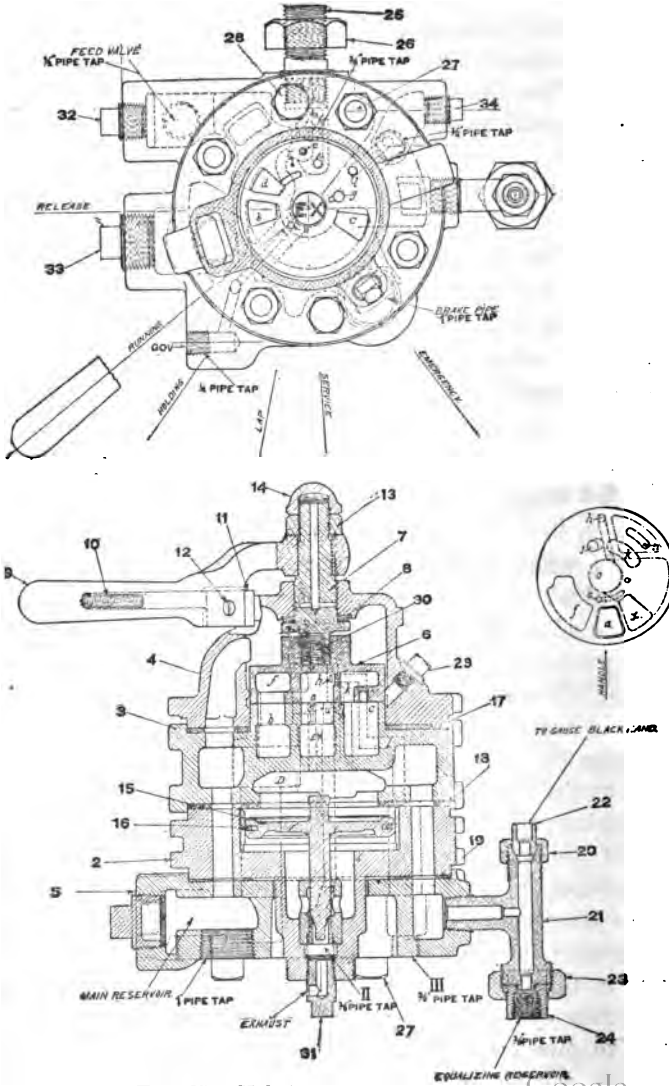

FIG. 75.—H-6 AUTOMATIC BRAKE VALVE.

Digitized by Google

Q. What is Fig. 72?

A. It is a view of the exterior of the brake valve.

Q. What does Fig. 74 represent?

A. It represents the top of the brake valves, and shows the different positions of the handles for operating them.

Q. What do Figs. 73 and 75 show?

A. Figs. 73 and 75 are views showing all the parts with their numbers and names.

Q. Name the parts.

A. They are as follows: 2, Bottom Case; 3, Rotary-Valve Seat; 4, Top Case; 5, Pipe Bracket; 6, Rotary Valve; 7, Rotary-Valve Key; 8, Key Washer; 9, Handle; 10, Handle-Latch Spring; 11, Handle Latch; 12, Handle-Latch Screw; 13, Handle Nut; 14, Handle Lock Nut; 15, Equalizing Piston; 16, Equalizing-Piston Packing Ring; 17, Valve-Seat Upper Gasket; 18, Valve-Seat Lower Gasket; 19, Pipe-Bracket Gasket; 20, Small Union Nut; 21, Brake-Valve Tee; 22, Small Union Swivel; 23, Large Union Nut; 24, Large Union Swivel; 25, Bracket Stud; 26, Bracket Stud Nut; 27, Bolt and Nut; 28, Cap Screw; 29, Oil Plug; 30, Rotary Valve Spring; 31, Service-Exhaust Fitting.

Q. In Fig. 75 three distinct views are given. Name them.

A. That at the top is a section showing the rotary valve seat and the arrangement of the ports in it; that at the right is a drawing of the rotary valve, and shows the arrangement of the ports and cavities in it; the lower cut is a longitudinal section through the body of the whole brake valve showing the interior construction, the equalizing discharge piston, and the service exhaust. In this drawing the pipe connections are also shown.

Q. Explain the pipe connections of the H-6 brake valve.

A. Referring to the piping diagram, Fig. 71, they are

Digitized by Google

as follows: Main-reservoir pipe; feed-valve pipe; brake-pipe; independent brake valve and application cylinder; distributing-valve release; excess-pressure pump governor; and one to the air gauge and equalizing reservoir connections.

Q. Are these connections made to the brake valve proper or to its base or pipe bracket?

A. They are made to the pipe bracket.

Q. Explain the operation of the H-6 brake valve.

A. *Release Position:* In this position the large port *a* of the rotary is brought into full register with the large port *b* (Figs. 73 and 75) leading to the circular cavity that extends around under the rotary seat to port *c*, which leads directly into the brake-pipe, thus providing a direct passage for main-reservoir air into the brake-pipe. In this position the port *l* which leads from the application cylinder through the independent brake valve to the rotary seat is closed so that the application cylinder air cannot escape, nor the engine and tender brakes release; the warning port *r* is open to the atmosphere, through the exhaust allowing a small quantity of air to escape from the feed-valve pipe, in the rotary valve which then connects ports *r* and *d*. Ports *j* in the rotary and port *g* in the seat, leading to chamber *D*, are in register so that air can flow freely to this chamber and the equalizing reservoir connected with it. Port *s* in the rotary and port *p* in the seat are in communication so that main reservoir air can flow to the excess pressure top of the pump governor.

Running Position: In this position port *a* in the rotary is blanked by the rotary seat and air at feed valve pressure, then enters the brake valve at port *d* in the rotary seat, leading from the feed valve, passes through cavity *f* in the rotary valve face into port *b* around through the cavity reaching to port *c* and thence to the brake pipe. In this position, brake-pipe air goes to chamber *D* and the equalizing reser-

voir through port *c* in the rotary seat, cavity *k* in the rotary, and port *g*.

In this position port *l* in the seat is in register with port and passage *h* in the rotary, so that air from the application cylinder of the distributing valve can escape to the atmosphere, and release the engine and tender brakes. Main-reservoir pressure continues to reach the low-pressure governor head through port *s* in the rotary, port *p* in the seat, and a suitable pipe connection.

Holding Position: Air from the feed-valve pipe flows to the brake-pipe through the same ports as in running position, but the port *l* is blanked so that the air cannot escape from the application cylinder and the brakes on the engine and tender remain applied, and the feed valve controls brake-pipe pressure. The same connection to the governor still exists as in running position.

Lap Position: All ports in the brake valve are lapped. The maximum-pressure governor head now controls the pump.

Service Application Position: Port *e*, the preliminary exhaust port leading from chamber *D* and the equalizing reservoir, is in register with port and passage *h* in the rotary leading into the exhaust *EX*, thus permitting the pressure above the equalizing discharge piston and valve 15 to reduce, and the latter to rise and discharge brake-pipe air to the atmosphere. When the brake-pipe pressure below the equalizing discharge piston reduces to an amount slightly below that remaining in chamber *D* and the equalizing reservoir, it will close the service exhaust and prevent further reduction in brake-pipe pressure. The operation of the H-6 brake valve in service applications is precisely the same as that of the G-6 brake valve already described.

Emergency Position: The large cavity *x* in the rotary, which leads to the emergency exhaust port *EX*, and the large brake-pipe port *c*, are in register, so that brake-pipe air has

Digitized by Google

a free escape to the atmosphere, thus providing for the quick reduction of brake-pipe pressure. At the same time port *j* through the rotary valve registers with the groove in the seat connecting with port *d;* cavity *k* also registers with this groove; the small port *n* connects cavity *k* with port *u* in the seat; therefore main-reservoir air flows through port *j*, the groove in the seat, cavity *k*, ports *n* and *u* to the application-cylinder pipe, and thence to the application cylinder of the distributing valve. This augments the maximum pressure in this chamber about 30 per cent in an emergency application of the brake. At the same time, a small port connects cavity *x* in the rotary valve with port *g* in the seat, and as cavity *x* is always in communication with the exhaust port *EX*, the pressure in chamber *D* and equalizing reservoir is released to the atmosphere.

Q. For what purpose is the plug 29?

A. This is an oil plug that provides a convenient means of oiling the rotary valve. Whenever the rotary begins to show signs of working hard, this plug may be removed and valve oil poured in until it appears at the level of the hole, when the plug should be screwed back. It should be borne in mind, however, that there should be no air pressure on the rotary when this plug is removed.

Q. Where does the oil go that is thus poured into the rotary?

A. It fills up the small annular space in the body 4, which surrounds the rotary and its seat at their line of meeting.

Q. How does this oil get upon the rotary seat?

A. When the rotary is under pressure the oil in the annular space is also under pressure, and as the rotary is turned in operating the brake, the oil is worked in between the rotary and its seat in a thin film, keeping it nicely lubricated.

Digitized by Google

Q. Aside from the lubricating the rotary and its seat, does the oil have any other effect on the working of the valve?

A. Yes, it tends to keep the rotary from leaking by keeping the parts well lubricated and thus avoids cutting.

Q. When it is desired to remove the brake valve for repairs, what is necessary to do?

A. Unscrew the bolts and nuts and lift the valve off its base. No pipe connections need to be disturbed.

Q. After removal to take the valve apart, what is necessary?

A. Unscrew the cap screws.

Q. What is the purpose of the small plug, with the side outlet in it, that is screwed in the service exhaust opening?

A. This small plug is provided with the side outlet to change the direction of the exhaust and prevent the escaping air from blowing on to the feet of the engineman.

THE S-6 INDEPENDENT BRAKE VALVE.

Q. What is represented in Figs. 76, 77 and 78?

A. The independent brake valve, Fig. 76 being an exterior view, Fig. 77 a sectional view, showing the rotary seat with its ports and also the arrangement of the interior parts. Fig. 78 shows the different positions of the brake valve handle, a plan of the rotary valve and an interior view of all its parts.

Q. What are the names of the parts of the independent brake valve as numbered on Fig. 78?

A. 2, Pipe Bracket; 3, Rotary-Valve Seat; 4. Valve Body; 5, Return-Spring Casing; 6. Return Spring; 7, Cover; 8, Casing Screw; 9, Rotary Valve; 10, Rotary-Valve Key;

Digitized by Google

11, Rotary-Valve Spring; 12, Key Washer; 13, Upper Clutch; 14, Handle Nut; 15, Handle; 16, Handle-Latch Spring; 17, Latch Screw; 18, Handle Latch; 19, Cover Screw; 20, Oil Plug; 21, Bolt and Nut; 22, Bracket Stud; 23, Stud Nut; 24, Upper Gasket; 25, Lower Gasket; 26, Lower Clutch; 27, Return-Spring Stop; 28, Cap Screw.

Q. How is this valve connected up with respect to piping?

A. As shown in the piping diagram, Fig. 71, it has one pipe connection to the automatic brake valve, one

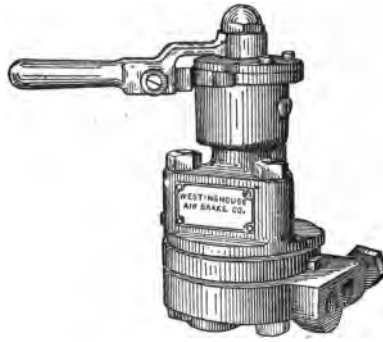

FIG. 76.—THE S-6 INDEPENDENT BRAKE VALVE.

to the application cylinder of the distributing valve, one to the distributing-valve exhaust, and one to the air supply.

Q. Does it have these pipe connections made direct to the brake valve or are they made to a permanent base the same as with the automatic brake valve?

A. The pipes are directly connected to a bracket and it is not necessary to disturb pipe joints to remove the operative parts of the valve.

Q. Why is the independent brake valve supplied in ad-

Digitized by Google

Digitized by Google

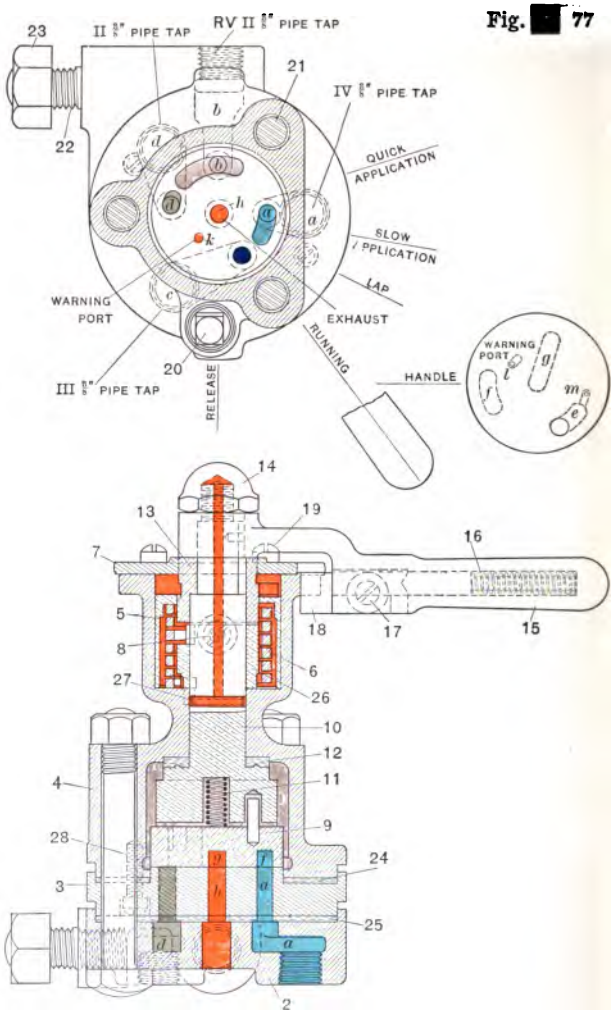

REDUCING VALVE PRESSURE	DISTRIBUTING VALVE EXHAUST PIPE TO DISTRIBUTING VALVE	DISTRIBUTING VALVE EXHAUST PIPE TO AUTOMATIC BRAKE VALVE	APPLICATION CYLINDER PRESSURE	ATMOSPHERIC

77

FIG. [redacted]—S-6 Independent Brake-Valve. Sectional elevation, plan view of rotary-valve seat, and transparent plan view of rotary valve.

Copyright, 1909, by The Norman W. Henley Publishing Co.

dition to the automatic brake valve with the ET equipment?

A. So that the locomotive brakes, if desired, may be operated independently of the automatic brakes both on the engine and on the train at all times.

Q. Name the different positions for the brake valve handle.

A. They are release, running, lap, slow application and quick application positions.

Q. Explain the different positions of the Independent Brake Valve (Fig. 78).

A. The position at the left is release; this can be used regardless of the position of the automatic brake valve handle to obtain an independent release. If the hand is removed from the handle when in this position the return spring automatically returns it to running position.

Running position is the normal position when the valve is not in use. If the automatic brake valve is in running position the brakes on the locomotive can be released by placing the Independent Brake Valve handle in running position. It is necessary for the handle to be in this position for the brakes on the locomotive to release when the handle of the automatic brake valve is placed in running position.

Lap position; in this position all ports are closed.

Slow-application position; the use of this position permits air pressure to gradually flow to the application cylinder of the distributing valve, thus causing the brakes to apply on the locomotive.

Quick-application position; in this position air pressure flows quickly into the application cylinder, causing a prompt application of locomotive brakes.

Q. When the handle is in release position, how are the brakes released?

A. When the handle is in release position port *d*, Fig. 78,

Digitized by Google

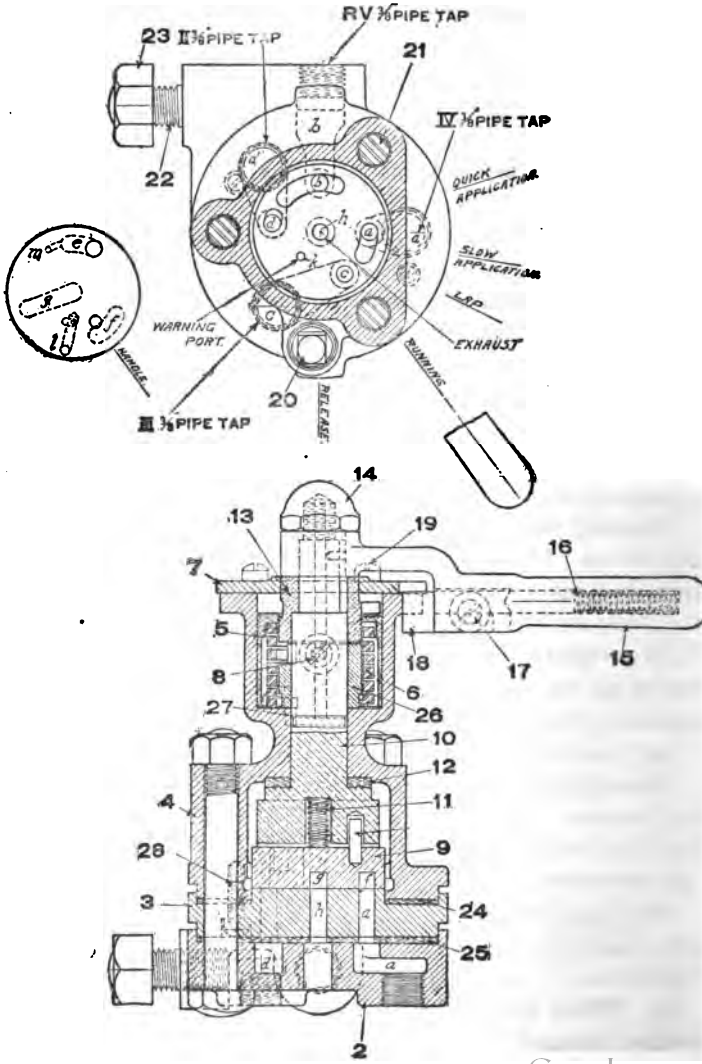

FIG. 78.—INTERIOR VIEWS OF THE S-6 INDEPENDENT BRAKE VALVE.

Digitized by Google

leading to the application cylinder of the distributing valve, is open to the atmosphere through exhaust port *g* in the rotary and central exhaust port *h* in the seat, so that the air can escape from the application cylinder, thus permitting the brakes to release.

Q. When the handle is placed in release position, will it remain there if the hand is removed?

A. No, it will be returned automatically to running position by return spring 6.

Q. Where should the handle be carried when the independent valve is not in use?

A. Always in running position.

Q. What is the relation of the ports in running position?

A. In running position port *a* and port *c* in the rotary seat are in communication through passage *f* in the rotary, so that air from the distributing-valve exhaust may pass through the independent brake valve to the automatic brake valve, where it can escape to the atmosphere, when the handle of the latter is in running position.

Q. Why are ports a, c, and passage f so arranged?

A. To enable the engineer, whenever operating the automatic brake, to hold the locomotive brake applied when relasing the automatic brakes; that is, to enable him to control the escape of air from the application cylinder when releasing.

Q. How are the brakes applied independently?

A. By moving the handle to either application position and admitting air to the application cylinder.

Q. How are the ports arranged in slow application position?

A. Supply port *b* and service port *d* are connected by the

Google

circular cavity *e* and small port *m*, and air can flow from the supply direct to the application cylinder.

Q. How are the ports arranged in quick application position?

A. Ports *b* and *d* both connect with cavity *e*, giving a more rapid flow of air from the supply to the application cylinder than in slow application position.

Q. What is lap position for?

A. To blank all ports when the brakes have been applied independently with the desired degree of force.

Q. What is the maximum brake-cylinder pressure obtainable with the independent brake valve?

A. Forty-five pounds.

Q. Why is this?

A. Because the air that comes from the main reservoir to the independent brake valve must first pass through a pressure-reducing valve, adjusted at 45 pounds; this valve is located in the main-reservoir pipe at a point before it reaches the independent brake valve.

Q. Trace the air through the independent brake valve?

A. Air from the main reservoir, reduced in pressure to 45 pounds, enters the brake valve, at the supply connection, Fig. 78, passes up through port *b* in the seat to the circular cavity *e* in the face of the rotary and through the port at the right hand end of this cavity to the top of the rotary. There is always independent-brake pressure, 45 pounds, on top of the rotary with the handle of the brake valve in any of its positions. With the handle in application position, port *b* and port *d* are connected by the cavity *e* (and port *m*), and air can flow into application cylinder pipe to the application cylinder of the distributing valve to apply the brakes. With the handle in lap position communication between the various ports is cut off and air cannot flow in

Digitized by Google

any direction through the valve. With the handle in running position, the passage *f* in the rotary connects port *a* from the distributing-valve exhaust, and port *c*, the latter leading to the automatic brake valve, so that when the handles of both valves are in running position the air may escape from the application cylinder to the atmosphere and release the brakes. With the handle in release position, cavity *g* in the rotary connects port *d* with the central exhaust port *h* leading to the atmosphere.

Q. When is it necessary to use the release position of the independent brake valve in order to release the locomotive brakes or reduce the brake-cylinder pressure?

A. Only when the handle of the automatic brake valve is not in running position.

Q. If it is desired to remove the brake valve for cleaning or repairs, what is it necessary to do?

A. Unscrew the nuts from bolts 21 and take the valve off its base.

Q. How is the valve taken apart to get at the interior parts?

A. Unscrew the cap screw 28, the cover screws 19, and the nut 14, and all parts of the valve may be separated.

Q. What is the function of the spring 11?

A. It keeps the key washer 12 and the rotary-valve key 10 up from the rotary and makes the washer press against the valve body 4, thus preventing leakage by the rotary-valve key when the pump is first started. It also serves to hold the rotary on its seat when there is no pressure and thus prevents dirt from getting on the valve seat.

Q. With the independent brake valve, can the locomo-

tive brakes be applied and released under any and all conditions of service?

A. Yes, they can be controlled perfectly with the independent brake valve under all conditions of service.

Q. When the engine is standing alone on ash pits, turntables, or sidings, and when doing work about the engine, should the independent brake valve be applied and left applied?

A. Yes, this practice should be followed at all such times.

Q. Why is it important to do this?

A. To avoid possibility of the locomotive moving when not desired, as from a leaky throttle or other cause.

THE NO. 6 DISTRIBUTING VALVE.

Q. What do Figs. 79 and 80 represent?

A. They represent the distributing valve and reservoir, showing its general appearance, pipe connections, and also the double chamber reservoir, with its pressure chamber and application chamber.

Q. Name the pipe connections to the distributing valve, and describe them.

A. Referring to Fig. 79, the connection marked *"MR"* is the supply-pipe connection. The supply pipe connects the main-reservoir pipe and the distributing valve. The connection marked *"IV"* is the distributing valve release pipe, and connects the exhaust port through the equalizing slide valve of the distributing valve with the independent brake valve, and when the latter is in running position, extends through it to the automatic brake valve. The intermediate connection marked *"II"* connects the application

Digitized by Google

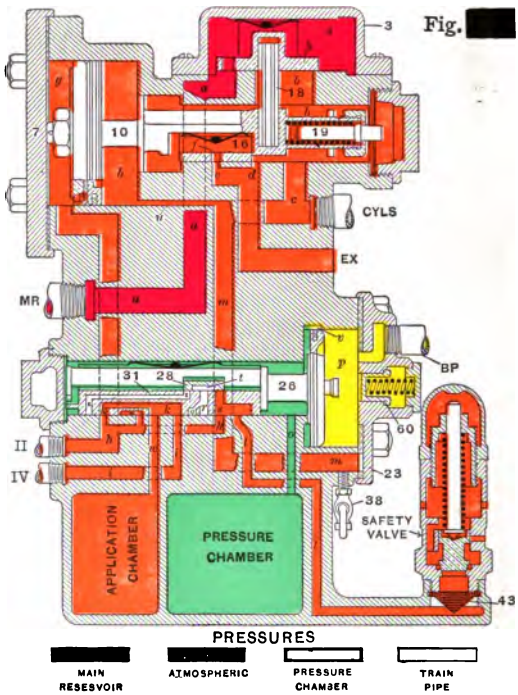

78A

FIG. [redacted]—No. 6 Distributing Valve in Released and Charging Position.

Copyright, 1909, by The Norman W. Henley Publishing Co.

Digitized by Google

cylinder to the independent brake valve, and to the automatic brake valve.

Referring to Fig. 80, the upper connection is the one that connects the distributing valve to the brake cylinders. The

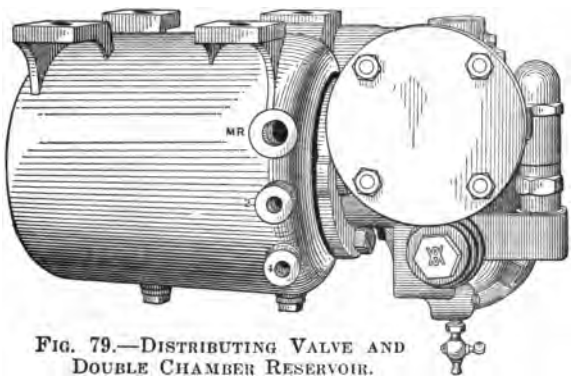

FIG. 79.—DISTRIBUTING VALVE AND DOUBLE CHAMBER RESERVOIR.

lower connection is the one between the brake pipe and the distributing valve.

Q. What is the function of the distributing valve?

A. To admit air to, and to exhaust it from, all the brake

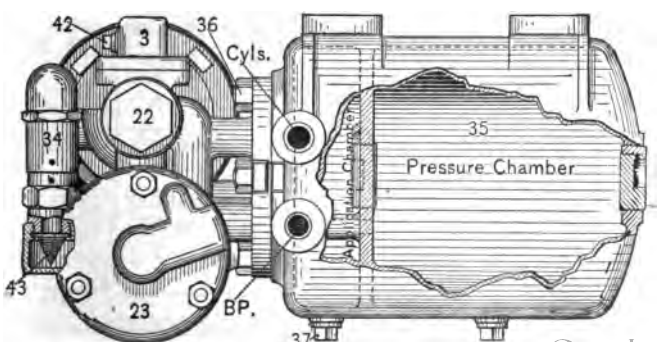

FIG. 80.—DISTRIBUTING VALVE AND DOUBLE-CHAMBER RESERVOIR.

Digitized by Google

cylinders on the locomotive, both in automatic and in independent applications, and to maintain automatically the desired cylinder pressure regardless of cylinder leakage and variation in piston travel.

Q. What are the purposes of the cut-out cocks in the brake-cylinder pipe?

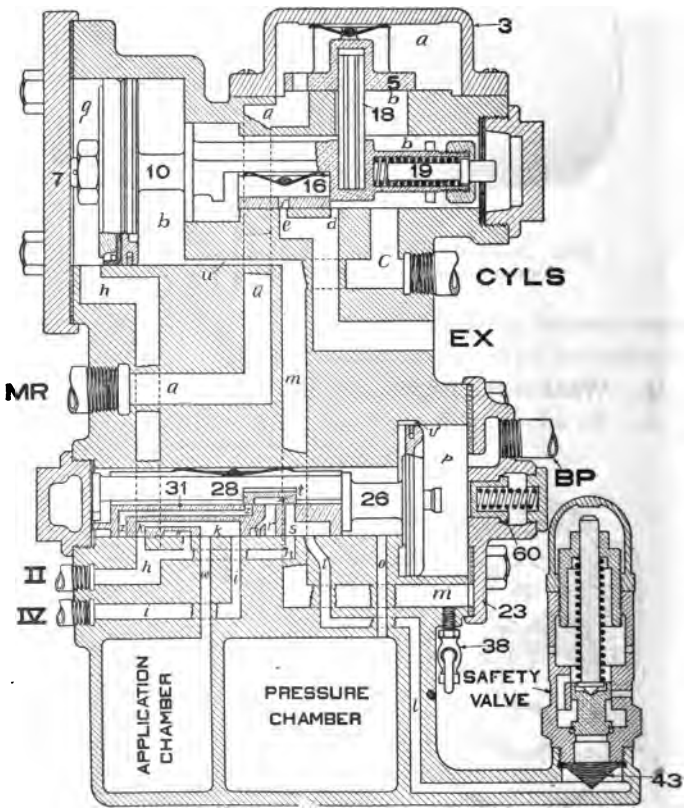

FIG. 81.—RELEASE POSITION—AUTOMATIC OR INDEPENDENT.

Digitized by Google

A. In case it is desired to cut out any one or all of the brakes for any cause, such as burst hose or broken down brake rigging, they may be closed to prevent the brakes from applying.

Q. Should the hose burst either in front of the engine-truck brake or of the tender-brake cylinder during a

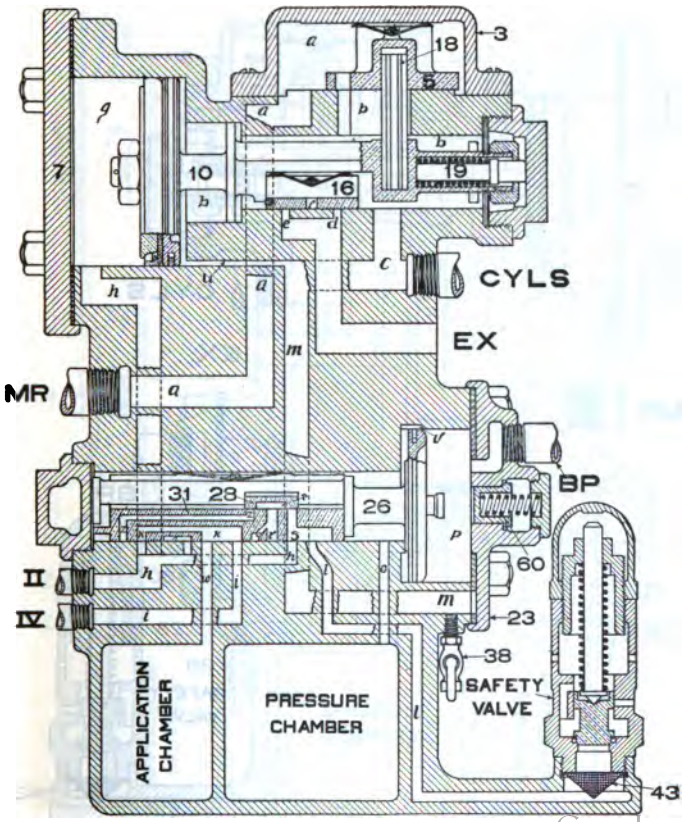

FIG. 82.—INDEPENDENT APPLICATION.

Digitized by Google

brake application, would the other brakes release?

A. No.

Q. Why is this?

A. Because of the special choke fittings (Fig. 71) in the end of the cut-out cocks toward the brake cylinder, which prevent air from passing through them faster than the distributing valve can supply it.

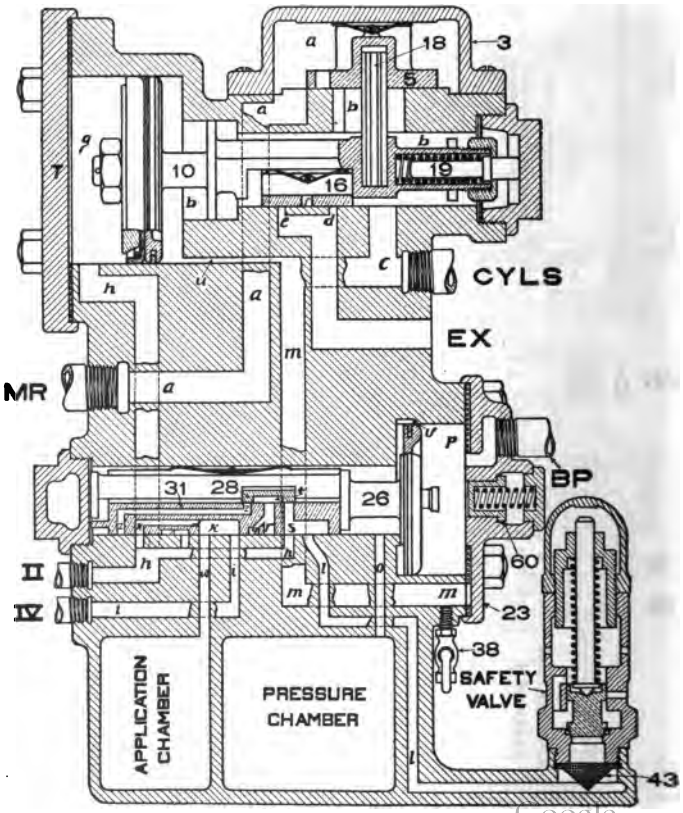

FIG. 83.—INDEPENDENT LAP.

Digitized by Google

Q. What is the standard brake-pipe pressure carried with the ET brake?

A. For the ordinary brake 70 pounds; for the high-speed brake 110 pounds; and for the double-pressure control 90 pounds.

Q. What does Fig. 91 represent?

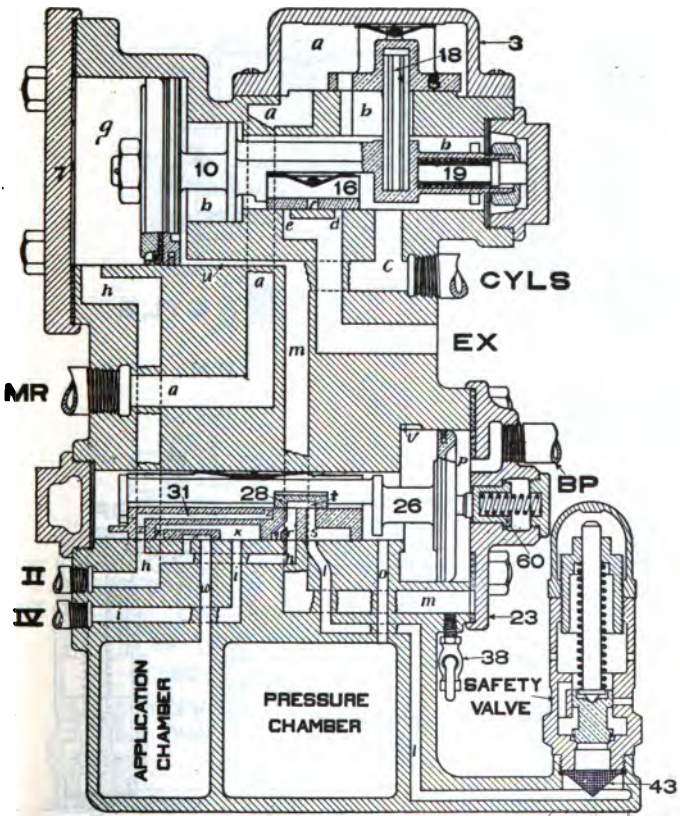

FIG. 84.—AUTOMATIC SERVICE.

Digitized by Google

A. It is a sectional drawing showing the interior of the distributing valve as actually constructed.

Q. Referring to Figs. 80 and 91, what are the names of the parts as numbered?

A. The proper names of the different parts of the distributing valve are as follows: 2, Body; 3, Application-Valve Cover; 4, Cover Screw; 5, Application Valve; 6, Application-

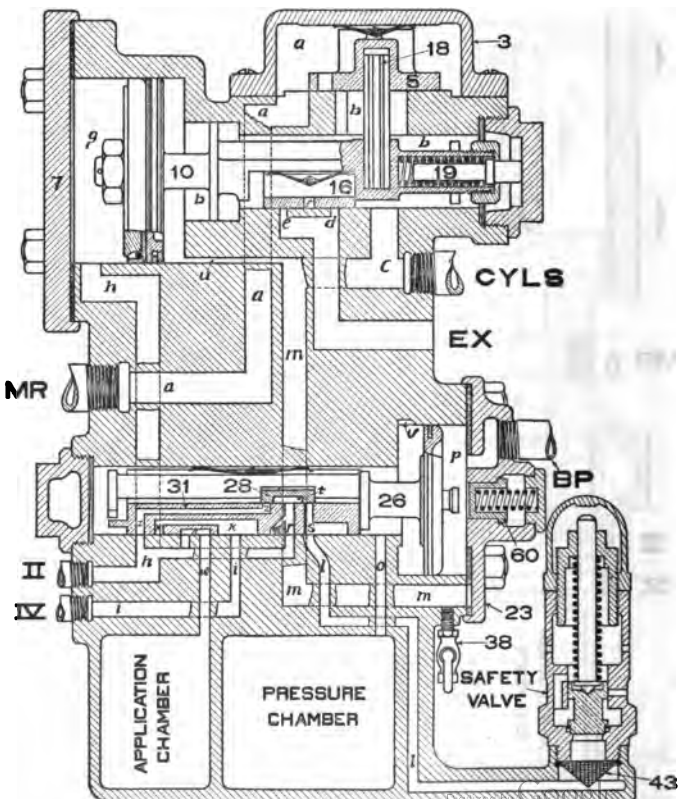

FIG. 85.—SERVICE LAP.

Valve Spring; 7, Application-Cylinder Cover; 8, Cylinder-Cover Bolt and Nut; 9, Cylinder-Cover Gasket; 10, Application Piston; 11, Piston Follower; 12, Packing Leather Expander; 13, Packing Leather; 14, Application-Piston Nut; 15, Application-Piston Packing Ring; 16, Exhaust Valve; 17, Exhaust-Valve Spring; 18, Application-Valve

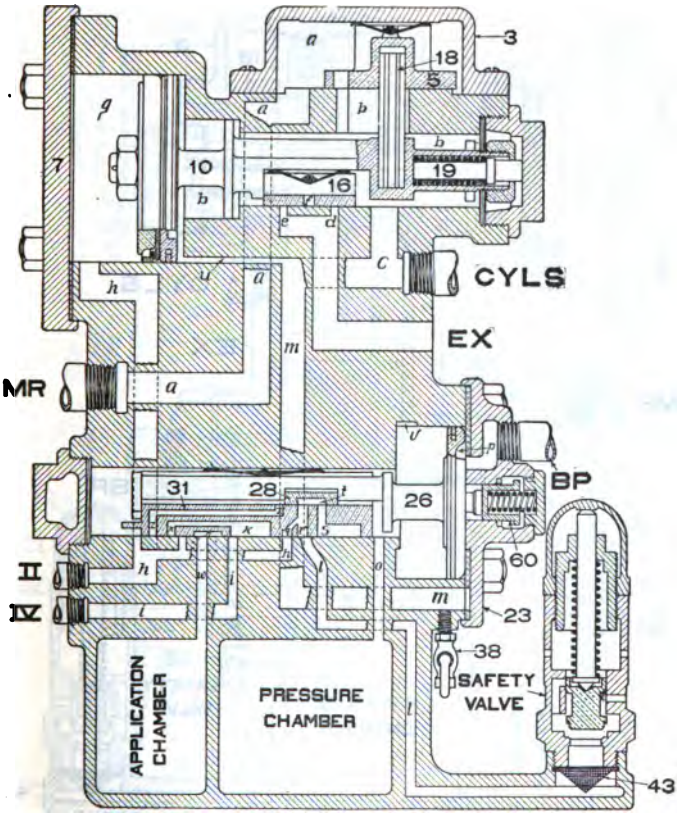

FIG 86.—EMERGENCY.

Digitized by Google

Pin; 19, Graduating Stem; 20, Application-Piston Graduating Spring; 21, Graduating-Stem Nut; 22, Upper Cap Nut; 23, Equalizing Cylinder Cap; 24, Cylinder-Cap Bolt and Nut; 25, Cylinder-Cap Gasket; 26, Equalizing Piston; 27, Equalizing-Piston Packing Ring; 28, Graduating Valve; 29, Graduating-Valve Spring; 31, Equalizing-Slide Valve; 32, Equalizing Slide-Valve Spring; 33, Lower Cap Nut; 34,

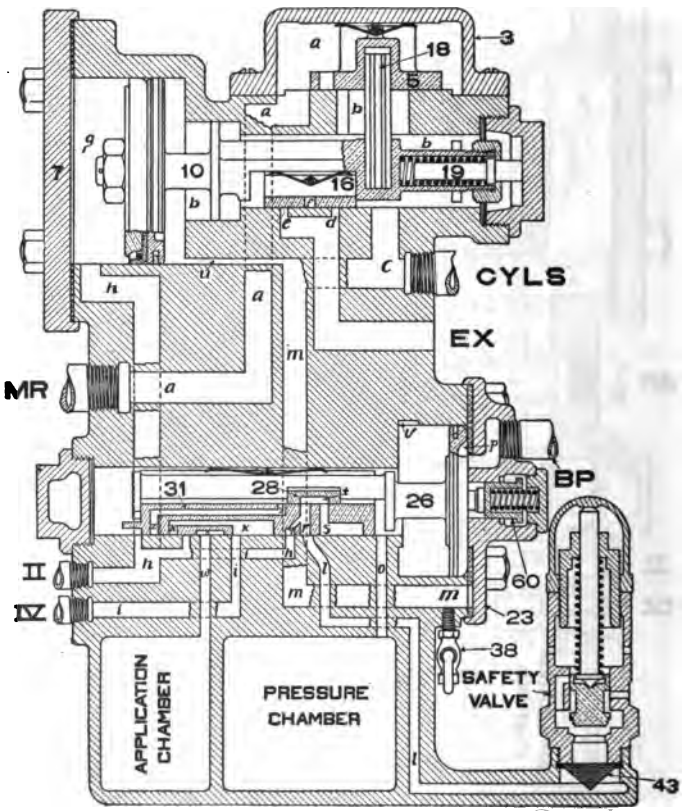

FIG. 87.—EMERGENCY LAP.

Digitized by Google

Safety Valve; 35, Double Chamber Reservoir; 36, Reservoir Stud and Nut; 37, Reservoir Drain Plug; 38, Distributing-Valve Drain Cock; 39, Application-Valve Cover Gasket; 40, Application-Piston Cotter; 41, Distributing Valve Gasket (not shown); 42, Oil Plug; 43, Safety-Valve Air Strainer;

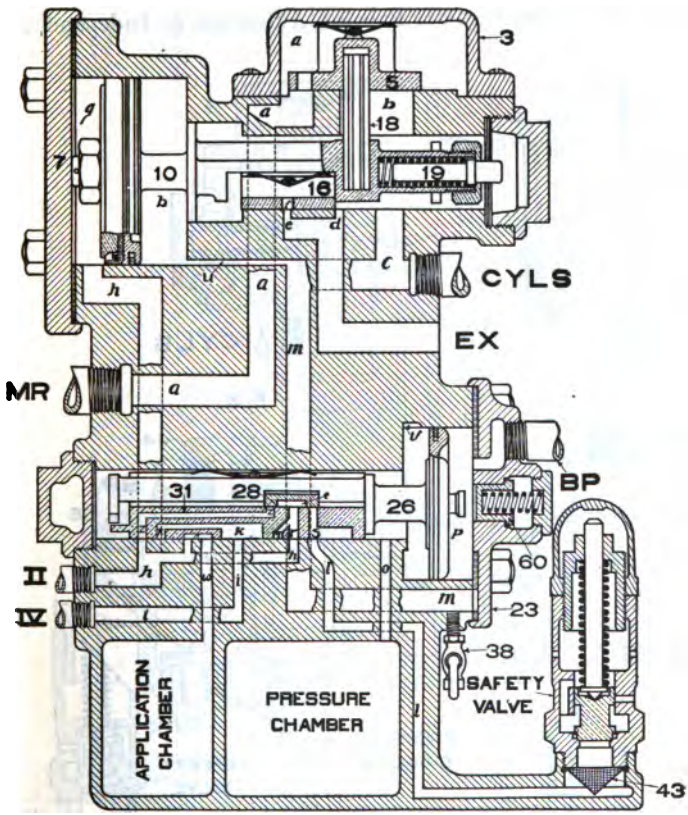

FIG. 88.—INDEPENDENT RELEASE WHEN BRAKE HAS BEEN APPLIED AUTOMATICALLY.

Digitized by Google

44, Graduating Sleeve; 45, Cylinder-Cap Nut; 46, Equalizing-Piston Graduating Spring.

Q. What do Figs. 81 to 89 inclusive represent?

A. They are diagrammatic drawings that represent the distributing valve in all of its different operative positions.

Q. Name these positions.

A. They are, Fig. 81, Release, Automatic or Independent;

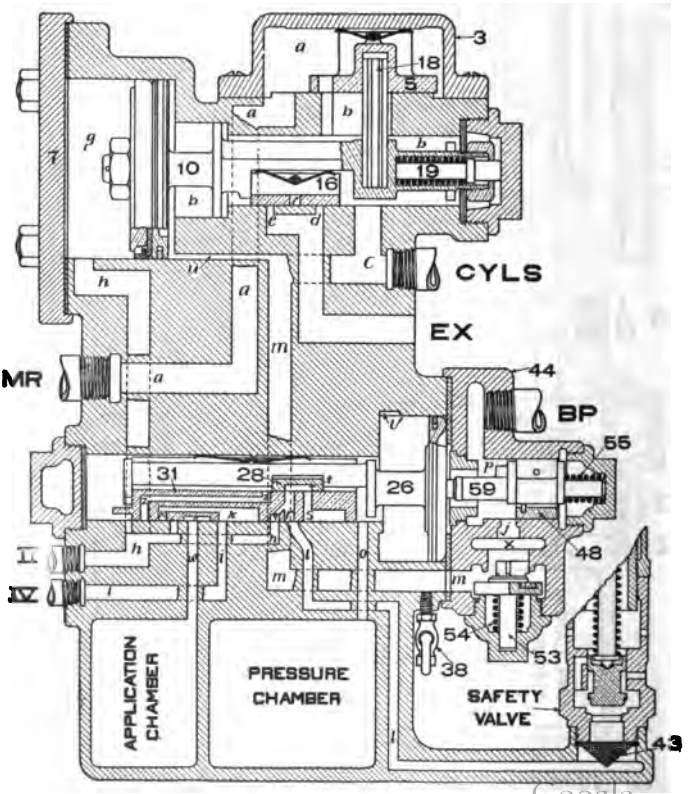

FIG. 89.—EMERGENCY, WHEN THE QUICK-ACTION CAP IS USED.

Digitized by Google

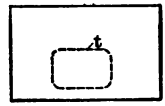

PLAN OF
GRADUATING VALVE

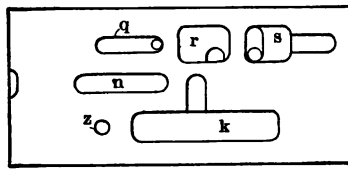

FACE OF SLIDE VALVE

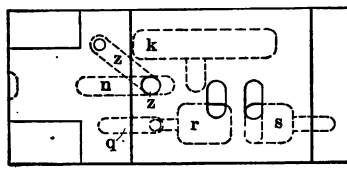

PLAN OF SLIDE VALVE

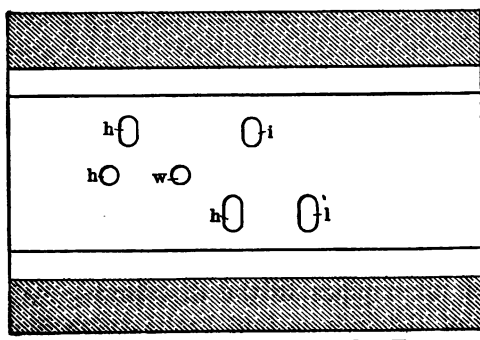

PLAN OF SLIDE VALVE SEAT

FIG. 90.—GRADUATING VALVE, EQUALIZING SLIDE VALVE AND SLIDE VALVE SEAT.

Digitized by Google

Fig. 82, Independent Application; Fig. 83, Independent Lap; Fig. 84, Automatic Service; Fig. 85, Service Lap; Fig. 86, Emergency; Fig. 87, Emergency Lap; Fig. 88, Release Position, when locomotive brake is released by independent brake-valve after an application by brake-pipe reduction; Fig. 89, Emergency Position, when the quick-action cap is used.

Q. What is represented in Fig. 90?

A. Fig. 90 represents the plan of the graduating valve, shows two views of the slide valve, face and plan, and a plan of the slide valve seat.

These views show the arrangement of ports as they actually are constructed, and are not diagrammatic drawings.

Q. How does the distributing valve charge up the pressure chamber of the double chamber reservoir?

A. In precisely the same manner that a triple valve charges an auxiliary reservoir; that is, by referring to Fig. 81, brake pipe air enters the distributing valve at *BP*, fills chamber *p*, and flows through the feed groove *v* at the top of piston 26 to the slide valve side of this piston, and thence to the pressure chamber through port *o* until the pressure in this chamber is equal to that in chamber *p* and the brake pipe.

Q. Then the pressure in the pressure chamber, when fully charged, is equal on both sides of piston 26?

A. Yes.

INDEPENDENT APPLICATION.

Q. What takes place in the distributing valve when the handle of the independent brake valve is placed in service position?

A. As shown in Fig. 82, air is admitted directly from

Digitized by Google

this valve to the application cylinder, forming a pressure therein which causes the application piston 10 to move forward compressing spring 20, until stopped by the graduating stem 19. This in turn moves the brake cylinder exhaust valve 16, and the application valve 5, over until the former closes the brake cylinder exhaust port and the latter opens its port. Under these conditions main-reservoir air from chamber *a* is free to flow to the brake cylinders through chamber *b* and port *c*.

Q. After the pressure in the brake cylinders becomes slightly greater than that in the application chamber what takes place?

A. The application piston 10 and the supply valve are moved by the excess pressure and the spring 20 to the independent lap position, as shown in Fig. 83. The movement of the piston is stopped by its striking the exhaust valve 16, which does not move.

Q. How is this valve made to assume this position?

A. When the pressure in chamber *b* is slightly greater than that in the application cylinder, piston 10 and application valve 5 move back until valve 5 laps its port, where further flow of main-reservoir air to the brake cylinder is cut off, and the brake remains applied with a pressure equal to or slightly in excess of that in the application cylinder.

Q. Suppose that after application valve 5 moves to lap position, leakage of air from the brake cylinders should cause the pressure therein to fall, what would occur?

A. As soon as the pressure in chamber *b* fell slightly below that in the application cylinder, the application piston 10 would be forced to the right and application valve 5 would open its port and admit main-reservoir air again to supply the leakage and raise the brake-cylinder pressure practically

equal to that in the application chamber and the application cylinder, then move back to lap.

Q. How are the brakes released after an independent application?

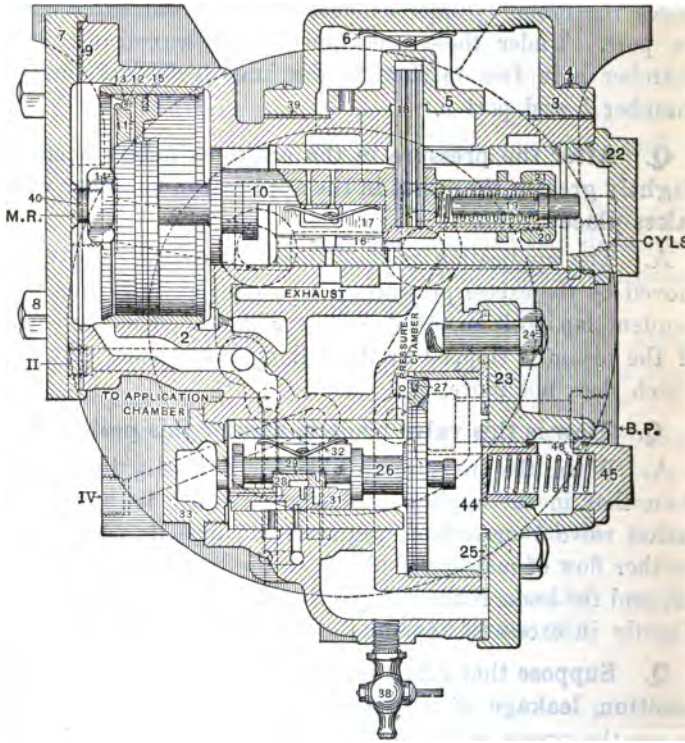

FIG. 91.—DISTRIBUTING VALVE SHOWING CONNECTIONS.

A. By placing the handle of the independent brake valve in running position, when the air in the application cylinder will escape to the atmosphere; the pressure in chamber *b* will then force the application piston and both valves to release

position, as shown in Fig. 81, and brake-cylinder air will then escape to the atmosphere through the exhaust ports in exhaust valve 16, and in the body of the distributing valve.

Q. What position must the handle of the automatic brake valve be in that the air may escape from the application cylinder when the handle of the independent brake valve is in running position?

A. In running position.

Q. Does the equalizing piston 26 and its attached parts operate during an independent application and release?

A. No; they remain inoperative, as shown in Figs. 81, 82 and 83.

AUTOMATIC OPERATION.

Q. How is an automatic service application of the brake made?

A. By moving the handle of the automatic brake valve to service position and making the desired brake pipe reduction.

Q. When a reduction in brake-pipe pressure takes place, what happens in the distributing valve?

A. With the pressure chamber charged equal to that in the brake pipe, a reduction in brake pipe pressure causes equalizing piston 26 to move to the right (Fig. 84), carrying with it slide valve 31 until the knob on the piston strikes the graduating sleeve 44, which closes the exhaust port leading from the application chamber to the distributing-valve release pipe, and the graduating valve 28 is moved to the right until it uncovers the service port *z*, which leads into passage *h* and the application cylinder, and through cavity *n* and port *w* to the application chamber, thus allowing air from the pressure chamber to flow into the application

Digitized by Google

cylinder and chamber. The pressure thus formed in the application cylinder and chamber causes the application piston 10, exhaust valve 16, and application valve 5 to assume the position shown in Fig. 84, "Automatic Service," and apply the brakes.

When the pressure in the pressure chamber falls slightly below that in the brake pipe, equalizing piston 26 moves back, carrying with it the graduating valve 28, without moving slide valve 31, until the graduating valve closes port *z*, and prevents any further flow of air from the pressure chamber to the application chamber. It is then in "Service Lap" position as shown in Fig. 85.

Q. How much of a brake-pipe service reduction is required to set the brake in full?

A. About 20 pounds, the same as with a triple valve.

Q. How is the brake released by the automatic brake valve?

A. An increase of brake pipe pressure raises that in chamber *p* (Fig. 85) of the distributing valve. This pressure being greater than that in the pressure chamber of the distributing valve, forces piston 26, and the parts controlled by this piston, to the left. In this position the pressure from the application cylinder and the application chamber is free to flow through port *h* and the independent brake valve to the automatic brake valve, from whence it may escape to the atmosphere when the brake valve handle is in running position.

The escape of the pressure through port *h*, connected with the applicaton cylinder, reduces the pressure in this cylinder and permits the greater pressure in chamber *b* to force piston 10 to the left; it in turn draws the parts attached to it to a corresponding position (Fig. 81). In this position brake-cylinder pressure escapes to the atmosphere through ports

Digitized by Google

d and *e* in the seat of the slide valve 16 and the brakes on the locomotive release.

Q. How is an automatic emergency application made?

A. By making a quick, heavy brake-pipe reduction, when the equalizing piston 26, with equalizing slide valve 31, and graduating valve 28, will move their full stroke with sufficient force to compress the graduating spring 46, strike against the gasket 25, and open port *h* wide to the application cylinder without opening port *w* to the application chamber, as shown in Fig. 86, permitting full equalization between the pressure chamber and the application cylinder only, which, being very small in volume compared to the pressure chamber, will equalize at a much higher pressure than when the application chamber is connected to the application cylinder; thus applying the brakes with a much greater force than in a full service application.

Q. Are there any other times when the application chamber and application cylinder are not connected?

A. No; only in emergency applications.

Q. From what other source is air pressure supplied to the distributing valve in emergency applications?

A. When the handle of the automatic brake valve is in emergency position, main-reservoir air feeds through ports in the rotary valve and seat to the application-cylinder pipe, and thence directly into the application cylinder of the distributing valve through port *h*.

Q. How much pressure is obtained in the application cylinder and the brake cylinders in an emergency application?

A. Assuming the brake-pipe pressure to be 70 pounds, about 65 pounds is had in the brake cylinders.

Q. How is this additional 15 pounds obtained?

A. By the higher equalization of application cylinder and pressure chamber, and the maintaining of the resulting

Digitized by Google

pressure by the flow of main-reservoir air through the brake valve and application-cylinder pipe.

Q. What provision is made to prevent too high a pressure in the brake cylinder?

A. The safety valve, as shown in Fig. 86, is connected through ports in the equalizing slide valve to the application cylinder, and when the pressure becomes higher than its limit of adjustment (68 pounds) it opens and vents the surplus air to the atmosphere.

Q. What is the emergency lap position of the distributing valve?

A. It is the position shown in Fig. 87, in which the application piston 10 and application valve 5 have been moved back by excess pressure and graduating spring 20 far enough to close the port in the supply valve and prevent further flow of main-reservoir air to the brake cylinders.

Q. What does Fig. 88 illustrate?

A. It illustrates the positions of the various valves in the distributing valve after an automatic application, and then an independent release have been made.

Q. In what kind of application do the equalizing piston 26 and the slide valve 28 and 31 operate?

A. In all automatic applications of the brake both service and emergency.

Q. How much pressure can be had in the brake cylinder in a full service application? In an emergency?

A. When the brake-pipe pressure is 70 pounds, about 50 pounds, the same as with the present brake in a service application. In an emergency application the cylinder pressure would approximate 65 pounds.

Q. Suppose the high-speed-brake pressure of 110 pounds is being used, how much will be had in the application cylinder in an emergency application?

Digitized by Google

A. About 90 pounds; the same will be had in the brake cylinders, and these pressures will gradually be reduced to 68 pounds by the safety valve.

Q. Is it necessary to break any pipe joints when removing the distributing valve from the double-chamber reservoir?

A. No; all the pipe connections are made to the double-chamber reservoir proper.

Q. Suppose it were desired to remove the application piston, how should this be done?

A. The application-valve cover 3 should first be removed, then the application valve 5 and the application-valve pin 18 should be taken out, after which the application-cylinder cover can be removed and the application piston taken out for inspection and repairs.

Q. What is the purpose of the small port u?

A. It forms a passage for any water that may deposit in the cylinder to the right of the application piston to drain off into port *m*, where it runs to the bottom of the valve, and should be drawn off each trip by means of the drain cock 38.

THE QUICK-ACTION CYLINDER CAP.

Q. What device is illustrated in Fig. 92?

A. The quick-action cylinder cap.

Q. With what valve is this used?

A. The distributing valve.

Q. What is the purpose of this cap?

A. It furnishes a means of obtaining quick-action with the distributing valve the same as is obtained with a quick-action triple valve; that is, it vents a portion of the brake-

Digitized by Google

pipe pressure into the locomotive brake cylinders in emergency applications.

Q. What effect has this on the train?

A. It quickens the reduction of brake-pipe pressure, making it more certain that all quick-action triple valves in the train will go to emergency position.

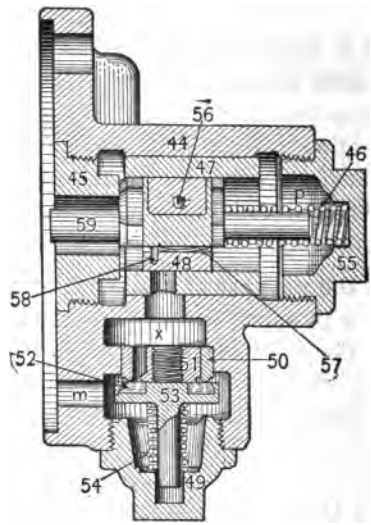

FIG. 92.—QUICK-ACTION CYLINDER CAP.

Q. When is this cap used?

A. In the same class of service that uses quick-action triple valves on the tender with the old standard locomotive brake.

Q. It is not then a standard part of the ET equipment?

A. No; only when conditions require it.

Digitized by Google

Q. When used, how is it attached to the distributing valve?

A. The plain cylinder cap 23 is removed, and the quick-action cap put in its place.

Q. Referring to Fig. 92, what are the parts of the quick-action cylinder cap?

A. 44, Cylinder-Cap Body; 45, Stop Nut; 46, Graduating Spring; 47, Bushing; 48, Slide Valve; 49, Check-Valve Nut; 50, Check-Valve Seat; 51, Check-Valve Nut; 52, Check-Valve Rubber Seat; 53, Check Valve; 54, Check-Valve Spring; 55, Graduating-Spring Nut; 56, Slide-Valve Pin; 57, Slide-Valve Spring; 58, Graduating-Stem Pin; 59, Graduating Stem.

Q. Referring to Fig. 89, how does this cap operate?

A. In an emergency application, equalizing piston 26 moves rapidly to the right, its knob striking graduating stem 59 and compressing the graduating spring, until it strikes the cylinder-cap gasket. The movement of the graduating stem carries with it slide valve 48, and opens port *j*, allowing brake-pipe air to flow to cavity *x*, force down check valve 53 and flow through ports *m* and *c* to the brake cylinders on the locomotive. The other parts of the distributing valve operate exactly as already described for emergency applications. As soon as the decreasing pressure in the brake pipe becomes equal with the increasing pressure in the brake-cylinder pipe, check valve 53 is forced to its seat by spring 54, and prevents any air flowing from the brake cylinders back into the brake pipe. When the brakes are released after an emergency application, piston 26 is forced to the release position, as already described, and the graduating spring forces graduating stem 59 and slide valve 48 to the position shown in Fig. 89, closing port *j*, and preventing brake-pipe air from flowing to the brake cylinders.

Google

Q. How does it operate when automatic service applications are made?

A. The parts do not move; the graduating stem 59 forms the stop against which the equalizing piston strikes, exactly the same as graduating sleeve 44 in the plain cylinder cap.

Q. What would occur if slide valve 48 leaked?

A. There would be a slight blow at the brake-cylinder exhaust of the distributing valve in release.

THE USE OF THE SAFETY VALVE.

Q. What function does the safety valve, shown in Figs. 79 and 80, perform when attached to the distributing valve?

A. It performs all the functions of the ordinary brake cylinder relief valve and in addition those of the high-speed reducing valves.

Q. What are the names of the different parts of this device?

A. As shown in the illustration they are, 2, Body; 3, Cap Nut; 4, Valve; 5, Valve Stem; 6, Adjusting Spring; 7, Adjusting Nut.

Q. Of what peculiar style or variety is this valve?

A. It is known as the pop-valve style.

Q. At what pressure is this valve usually adjusted when used in the ET equipment?

A. At 68 pounds.

Q. Explain its operation.

A. The adjustment of the valve is effected by screwing down the regulating nut 7 until the adjusting spring has sufficient tension to hold valve 4, against the pressure it is desired to retain, after which the cap nut 3 is screwed on firmly in place. When the air pressure acting upward

on valve 4 is greater than the adjusting spring can resist, this valve will lift from its seat, exposing a slightly greater area to the pressure below, which causes it to move promptly the whole length of its travel, or until the stem strikes the cap nut, and allow the surplus air to escape through the two bottom ports in the body 2.

Q. What is the object of the by-pass port that leads up into the chamber in the body 2 above valve 4?

A. When valve 4 lifts to relieve pressure it travels far enough to cover the upper end of the by-pass port, thus preventing air in any considerable quantity from passing into the chamber above. When it commences to lower, it gradually opens this port, and closes the lower ports to the atmosphere, allowing air to pass into the upper chamber, where it will then form a pressure above valve 4 and cause it to seat promptly. There are two relief ports in the chamber to allow the air remaining therein to escape after valve 4 closes; while valve 4 uncovers the upper end of this by-pass port the two relief ports can not allow the air to escape so fast but that pressure will be formed in the upper chamber in the valve body.

FEED VALVES.

THE B-6 FEED VALVE.

Q. What is Fig. 93?

A. It is a photographic view of the exterior of the feed valve, used with the ET equipment, to regulate the pressure in the brake-pipe when the handle of the automatic brake valve is in running or in holding position.

Q. How does this feed valve differ from the slide valve feed valve used with the G-6 brake valve?

A. Its operation is the same except that, by the use of

Google

the adjusting wheel it can be adjusted for the pressure desired. It is also different in detail, having a larger regulating valve a supply valve with a port in it, and a different supply valve piston. For description of its operation see G-6 Feed Valve.

Q. What advantage does this adjusting feature give over that of the older feed valve?

A. It makes it possible to dispense with one of the two

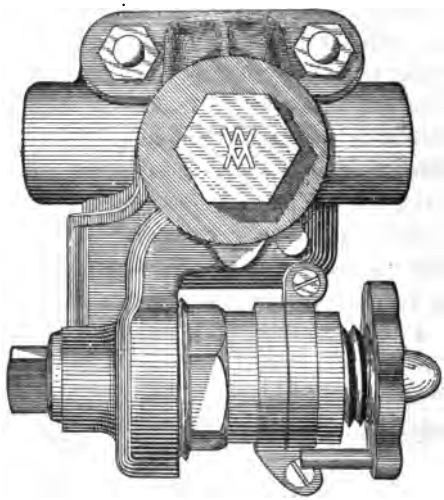

FIG. 93.—B-6 FEED VALVE.

feed valves now used with the high-speed and the double-pressure control brakes, also the reversing cock bracket.

Q. How is the adjustment of the B-6 feed valve effected?

A. By turning the adjusting handle in one direction until the pin on it strikes the lower stop the valve will maintain 70 pounds brake-pipe pressure and by turning it in the other direction until the pin strikes the upper stop, it will maintain 110 pounds brake pipe pressure.

Digitized by Google

Q. If any other pressures than the above are desired, what must be done?

A. The positions of the stops must be changed.

THE C-6 REDUCING VALVE.

Q. What kind of a reducing valve is used with the ET equipment?

A. It is known as the C-6 and is practically the same as the B-6, except that it does not have the adjusting wheel of the former. For a description of its operation see G-6 Feed Valve.

Q. At what pressure is it adjusted?

A. At 45 pounds.

Q. To what does this pressure reducing valve supply air?

A. It supplies both the independent brake and the train air signal.

THE PUMP GOVERNOR.

Q. What pump governor must be used with the ET equipment?

A. The SF-4 pump governor.

Q. To what is the upper part of the excess-pressure head connected?

A. The feed-valve pipe.

Q. What pressure is always in the excess-pressure head and the feed-valve pipe connection?

A. Maximum brake-pipe pressure.

Q. To what pressure is the maximum-pressure head connected?

A. To the main-reservoir pressure direct.

Digitized by Google

Q. Explain the operation of the governor in this equipment.

A. The connection marked *A B V*, Fig. 43, has main-reservoir air flowing through it into the excess-pressure top under the air diaphragm 28, when the handle of the automatic brake valve is in release, running, or holding position; and the connection marked *F V P* has air at maximum brake-pipe pressure flowing through it to the spring case above the air diaphragm regardless of the position of the brake-valve handle. Assuming that the tension on the excess-pressure spring 27 is such that it requires an excess pressure of 20 pounds beneath the diaphragm to raise it against the air pressure bearing down upon it from above, the main-reservoir pressure must be 20 pounds in excess of that in the feed-valve pipe before the diaphragm can be lifted and the pump stopped.

If the handle of the automatic brake valve is moved to service-application position, the communication between the main reservoir and chamber *d* of excess pressure top is cut off so that the pressure above the diaphragm will hold it down with the pin valve on its seat; this head cannot then control the pump. The pump will now work until the main-reservoir pressure reaches that for which the maximum-pressure head at the right is adjusted, say 130 pounds, when this head will operate in the usual manner and stop the pump.

When the handle is moved to release, running or holding position, main-reservoir air may again flow to the excess-pressure head to chamber *d* under the diaphragm. When the brake-pipe pressure is restored to the maximum for which the feed valve is adjusted, and the handle of the brake valve is either in running or in holding position, the pump can work until the main reservoir has accumulated the proper excess, when the excess-pressure head will operate and stop the pump.

Digitized by Google

Q. In the piping diaphragm, Fig. 71, there is shown, placed in the main-reservoir pipe, a cut-out cock. At what point with relation to this cock is the maximum-pressure head connected to the main reservoir?

A. It is connected between this cut-out cock and the main reservoir.

Q. Why is it so located?

A. So that in case it is necessary to close the cut-out cock to make repairs to any other part of the equipment, the maximum pressure top can still control the pump, and prevent it from pumping up an excessively high main-reservoir pressure.

Q. What happens when this cut-out cock is closed?

A. A port is so arranged that the air in the main-reservoir pipe and brake-pipe is vented to the atmosphere, resulting in an application of the brake. If the engineer fails to open the cock the brakes will not release and the train cannot be started.

DEFECTS OF "ET" EQUIPMENT.

Q. If the application cylinder pipe should leak at any of its connections between the distributing valve and the independent brake valve, what would be the effect?

A. It would cause the brakes to leak off both in automatic service and in independent brake applications.

Q. If the pipe connection between the independent and the automatic brake valves should leak, what would be the effect?

A. The brake would leak off when the automatic brake-valve handle was in holding position, but not at other times.

Q. Suppose the distributing-valve release pipe should leak at any of its connections between the distributing

Digitized by Google

valve and the independent brake valve, what would be the effect?

A. When an independent brake application was made and the handle of the independent brake valve was lapped, this leak would permit the brakes to gradually release; in the automatic application it would make no difference, but when a release of an automatic application of the train brake was made it would gradually destroy the holding feature of the automatic brake valve.

Q. If there should be a leak through the rotary of the independent brake valve, what would be the effect?

A. While both brakes are released and both brake valves are in running position, it will cause a slight blow at the emergency exhaust port of the automatic brake valve. When either the automatic or the independent brake is applied in partial service, it will cause a building up of pressure in the application cylinder to the maximum adjustment of the pressure reducing valve, and hence cause the brakes to apply with full independent pressure. It will also cause a building up of pressure in the application cylinder, while the handle of the automatic brake valve is in release or in holding positions.

Q. If the main-reservoir connection to the distributing valve should leak, what would be the effect?

A. It would make no difference with the operation of the distributing valve, but it would make the pump work harder to supply the leak.

Q. If the application valve 5 should leak, what would be the effect, and how could the leak be detected?

A. It would increase brake-cylinder pressure above that in the application cylinder, and force the application piston and application valve back far enough to allow the surplus air to escape at the brake-cylinder exhaust port. The leaky

valve would be detected by the escape of brake-cylinder air at the exhaust port during a brake application.

Q. Would this be true if there were leakage in the brake cylinders at the same time?

A. That would depend on whether the leakage from the brake cylinders was greater or less than that through the application valve. If greater, there would be no escape of air at the brake-cylinder exhaust port; if less, there would be.

Q. If the application-piston graduating spring 20 (Fig. 81) should break, what would be the effect?

A. The application piston and valve would be less sensitive in graduating.

Q. If the exhaust valve 16 should leak how could it be known?

A. By a blow from the brake-cylinder exhaust port while the brakes are applied.

Q. How would a leaky packing leather and packing ring in the application piston affect the operation of the distributing valve in brake applications?

A. It would tend to reduce the efficiency of the valve in maintaining any cylinder leakage.

Q. If equalizing slide valve 31 should leak, what effect would it produce?

A. When brakes are released and both brake valves are in running position, there would be a slight blow at the emergency exhaust port of the automatic brake valve. If the independent brake were applied there would be an increase in application-chamber pressure which would cause the brakes to go on harder. If the automatic brake is applied in partial service, then application-cylinder pressure would increase and the brakes go on harder to the limit of full equalization, if ordinary pressure is used; or if high-speed pressure is used,

until the safety valve would open and relieve the application-cylinder.

Q. Suppose the engine having the leaky equalizing slide valve were second in a double-header, what might happen then?

A. The brakes might entirely release, if the application were a partial service.

Q. Suppose the graduating valve 28 should leak, what would be the effect?

A. In release position no effect would be observed. In partial service application, the effect would be practically the same as stated would occur with a leaky slide valve 31.

PRINCIPAL DIFFERENCES BETWEEN THE No. 5 AND No. 6 ET EQUIPMENTS.

Piping. In the No. 5 Equipment, the double-heading cock is a *double cut-out cock,* one passage for the brake-pipe, and the other for the *double-heading pipe,* the latter taking the place of the distributing-valve release pipe in the No. 6 equipment. The double-heading pipe does not connect with the Independent Brake Valve. The plug in the double cut-out cock is arranged so that when the brake-pipe passage is open, the double-heading-pipe passage is closed, and *vice versa,* Consequently the double-heading pipe is only used when the engine is second in double heading, or a helper.

The dead-engine by-pass connection was not furnished with the No. 5 equipment unless specially ordered, so that in many cas[illegible] be found in that equipment.

[illegible]ter air gage was furnished with the No. 5 [illegible]ace of the No. 2 duplex gage, its connection [illegible]ke-cylinder pipe only.

The only difference in manipulation be[illegible] equipments is in double heading; with the

Digitized by Google

No. 5 equipment, the double cut-out cock is turned to close the brake-pipe, and the handle of the automatic brake valve placed *on lap* on all engines except the one from which the brakes are being operated. In all cases of application and release of the brakes, the manipulation is exactly the same.

Automatic Brake Valve. The H-5 automatic brake-valve used with the No. 5 equipment differs from the H-6 Valve in the arrangement of ports in rotary valve and seat; in an emergency application, the equilizing reservoir is connected with the application chamber of the distributing valve, thereby increasing the volume of the latter and it's pressure of equalization with the pressure chamber to obtain the increased emergency brake-cylinder pressure; but the increase obtained by this arrangement is only about 20 per cent, instead of 30 per cent, as obtained with the No. 6 equipment.

In the H-5 brake-valve, main-reservoir pressure does not feed into the application cylinder of the distributing valve; in the No. 5 equipment, this feeding occurs in the distributing valve itself.

In the H-5 brake-valve, the warning port blows main-reservoir air to the atmosphere instead of feed-valve-pipe air. Also when the handle is *on lap,* the double-heading pipe connection is connected to the atmosphere.

Independent Brake Valve. The SF Independent Brake Valve, used with the No. 5 equipment, has only three pipe connections, and is quite different in arrangement of ports and details from the S-6 valve just described. Its manipulation, however, is just the same.

Distributing Valve. The No. 5 distributing valve differs from the No. 6 in many ways. The application cylinder and application chamber are always directly connected, without regard to the position of the equalizing slide valve; a port connects main-reservoir pressure with the equalizing slide-valve seat, which, in emergency applications, feeds main-res-

Digitized by Google

ervoir air into the application chamber; the safety valve is set for 53 pounds, instead of 68; port *m*, (Fig. 86) does not exist, there being no provision in the No. 5 distributing valve for the application of the quick-action cylinder cap; connections II and IV, (Fig. 86) are reversed in the No. 5 distributing valve; the main-reservoir and brake-pipe connections are for smaller sized pipe; the arrangement of ports in equalizing slide valve and seat are different; the supply valve is of slightly different construction; there is no graduating sleeve and spring in the equalizing piston; there is no drain cock (No. 38, Fig. 86), a small pipe plug being used instead; the arrangement of ports in the end of the double-chamber reservoir are different, so that a No. 6 distributing valve cannot be used on a No. 5 reservoir, and *vice versa*. But it responds to brake-pipe reductions in quite the same manner, so that, outside of the higher emergency brake-cylinder pressure with the later equipment, an engineer could not tell from the cab which distributing valve was installed.

All other parts of the two equipments are practically the same.

Digitized by Google

CHAPTER VIII.

AIR-SIGNAL SYSTEM.

The signal equipment described in this chapter refers to the engine equipment used with the old-style Westinghouse apparatus.

The arrangement on the cars has not been changed, while that in the new schedule ET Westinghouse equipment has been modified slightly. This modification is explained more in detail in the chapter covering the ET equipment.

Q. What form of signal was used before the compressed-air signaling apparatus was invented?

A. The old bell rope and gong signal, such as is now used on freight trains.

Q. Do all roads use the air signal in passenger service?

A. Not all, but most roads do.

Q. What parts of the signaling apparatus are found on the engine?

A. The strainer, the reducing valve (Fig. 99), the whistle valve (Fig. 98), the whistle (Fig. 100), and the pipe connections as shown in Fig. 94.

Q. What parts are found on the car?

A. The discharge valve (Fig. 97), the signal cord running the length of the car, and the signal-pipe connections as shown in Fig. 95.

Q. Where is the discharge valve (Fig. 97) usually located?

A. As shown in Fig. 95, although it is sometimes found inside the car over the door.

Digitized by Google

Q. Why is it better placed outside?

A. When it is so placed the noise of the discharge will not affect nervous people.

Q. How does the car discharge valve work?

A. The signal cord is attached to the valve in the hole of 5 (Fig. 97); when the cord is pulled, valve 3 is forced from its seat, allowing signal-pipe pressure to escape to the atmosphere.

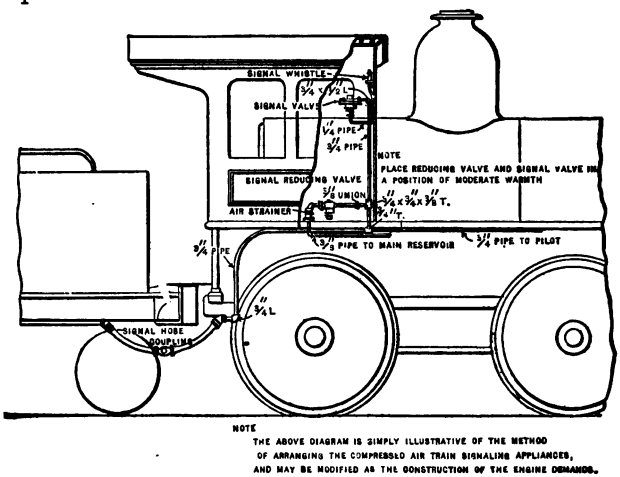

FIG. 94.—SIGNAL EQUIPMENT FOR ENGINE NOT EQUIPPED WITH SCHEDULE E. T.

Q. What is the trouble when there is a constant leak from the discharge valve?

A. There is dirt on the seat of valve 3 (Fig. 97).

Q. Where is the signal valve (Fig. 98) located?

A. In the cab, where it will not be subjected to severe heat or cold.

Q. Where are the reducing valves (Fig. 99) usually placed?

Digitized by Google

A. It was formerly customary to locate them outside, next to the main reservoir, but now good practice locates them inside the cab where they cannot freeze in winter.

Q. What is the duty of these valves?

A. To maintain a constant pressure in the whistle line.

Q. Explain the action of the reducing valve (Fig. 99).

A. Spring 13 controls the movement of piston 10 which,

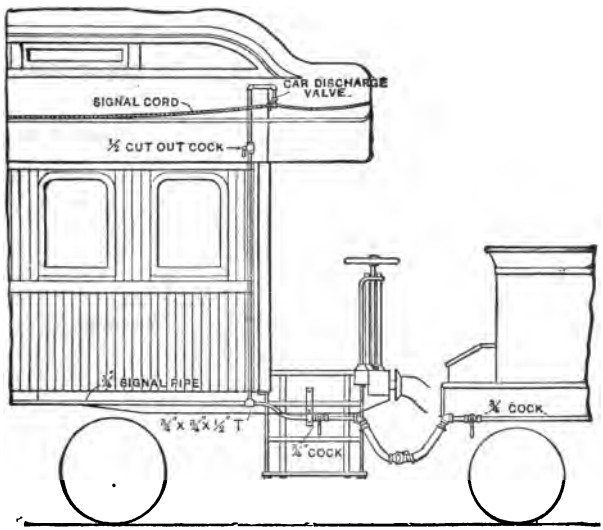

FIG. 95.—LOCATION OF SIGNAL APPARATUS ON COACH.

in turn, forces check-valve 4 from its seat when the tension of the spring 10 is more powerful than the pressure downward on the piston.

The tension of this spring is usually adjusted to withstand a pressure of 40 pounds acting downward on the piston, hence when the pressure is less than this amount the spring will raise the piston upward to the position shown in Fig. 99. In this position air entering from the main reservoir

connection at A will pass through the restricted opening shown, past the unseated check valve 4 and on, as indicated by the arrows, and out to the signal pipe at B. As soon as the pressure in chamber C and the signal pipe is greater than the tension of spring 13, the piston will be forced downward, allowing the main-reservoir pressure and the spring 6 to force the check to its seat. This valve will not open again until by leakage or otherwise the pressure in the signal pipe has been reduced below 40 pounds.

Q. Of what use is the plug valve in the upper left-hand corner?

A. To cut out main-reservoir pressure in case we wish to take the reducer apart.

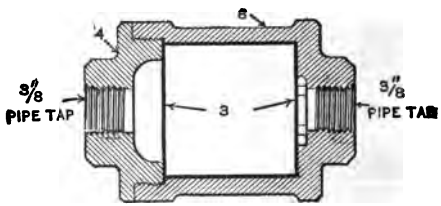

FIG. 96.—AIR STRAINER ON ENGINE.

Q. What is the object of the air strainer (Fig. 96).

A. To keep any foreign matter from entering the reducing valve or signal system, where it may occasion an improper response of the signals.

Q. Of what does this strainer consist?

A. Of the body 8 (Fig. 96), perforated brass discs 3, and the space between these perforated plates is filled with curled hair.

Q. Has this strainer ever been used to fulfill an office other than as described above?

Digitized by Google

A. Yes; a tee is sometimes inserted between the strainer and the reducing valve. A branch of the tee is then piped to the pump governor, and the strainer performs the double duty of keeping foreign matter both from the signal system and the pump governor.

Q. Is any material other than curled hair ever used to fill in the space between the perforated plates 3 (Fig. 96)?

A. Yes; sponge has been used for this purpose, but the results obtained were not satisfactory. The hair seems to

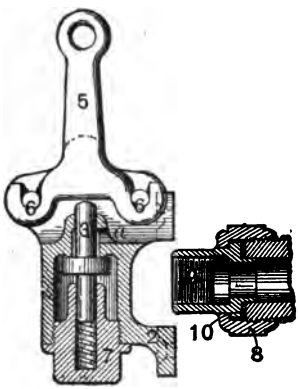

FIG. 97.—CAR DISCHARGE VALVE.

collect the dirt better and it is much easier to clean than the sponge, as it permits of a freer separation.

Q. Where is the whistle (Fig. 100) located?

A. In the cab, as near the engineer as convenient.

Q. To what is it connected?

A. To a pipe which leads from the signal valve as indicated (Fig. 98).

Q. What is its use?

A. As the signal or whistle valve (Fig. 98) operates, the

Digitized by Google

air leaving this valve escapes through the whistle (Fig. 100). The blast signals the engineer.

Q. Where does the air come from that supplies the signal system?

A. From the main reservoir on the engine.

Q. Explain the passage of the air from the main reservoir through the signal system.

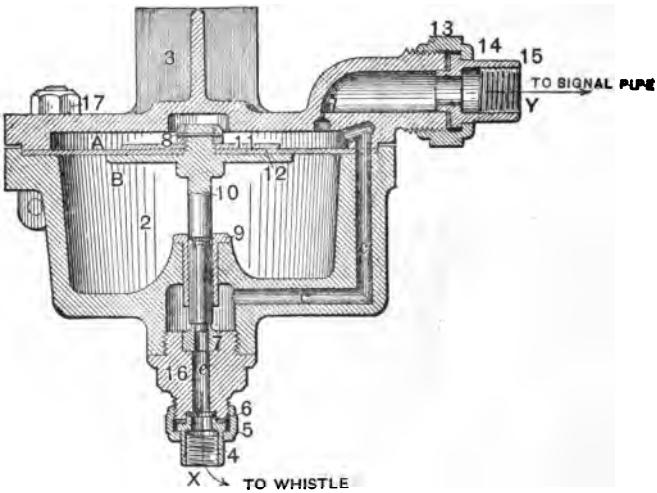

FIG. 98.—WESTINGHOUSE SIGNAL VALVE.

A. It first passes from the main reservoir (Fig. 94) through the strainer and reducing valve. After leaving the reducing valve there is a tee in the pipe, one branch of which leads to the signal valve (Fig. 98), and the other back into the train. Under each car (Fig. 95) there is a strainer in a tee, and a branch of the whistle line goes to the discharge valve (Fig. 97).

Digitized by Google

Q. Explain the operation of the Westinghouse signal valve (Fig. 98) in charging.

A. After the air passes from the main reservoir and through the reducing valve, it is free to go back into the train and also enter the signal valve at *Y*. It then passes through the contracted port *d* into cavity *A* on top of the rubber dia-

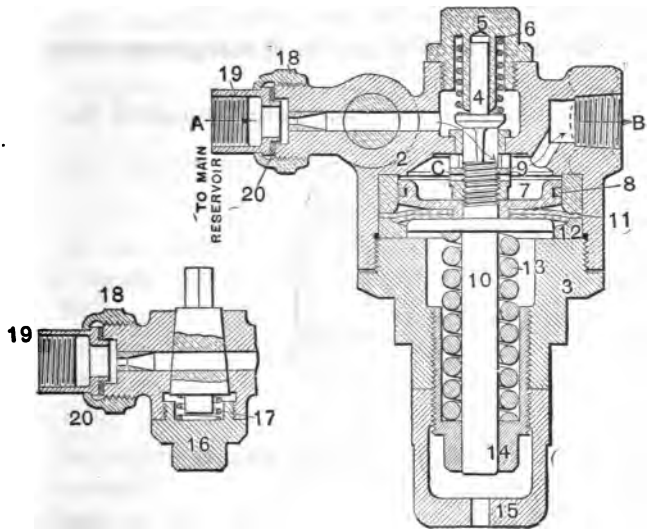

FIG. 99.—WESTINGHOUSE SIGNAL REDUCING VALVE.

phragm 12, and around through port *c*. The lower half of the stem 10 is three sided, so that the air can pass up to where the stem looks to be tight in the bushing 9. This joint is not tight, but sufficiently so to allow the air to feed by into chamber *B* very slowly. The reducing valve is adjusted to forty pounds, and if we wait a short time the forty pounds will equalize on both sides of the diaphragm 12; that is, there

Digitized by Google

will be forty pounds in each chamber *A* and *B*, as there is also throughout the signal pipe on the train.

Q. What does the conductor do if he wishes to signal the engineer?

A. He pulls the signal cord in the car.

Q. What is effected by this?

A. It makes a sudden reduction of signal-pipe pressure through the car discharge valve (Fig. 97).

Q. What is the effect on the Westinghouse valve (Fig. 98).

A. This starts a reduction wave throughout the signal

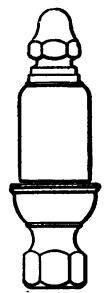

FIG. 100.—SIGNAL WHISTLE.

pipe, and in the signal valve it is first felt in chamber *A*, on top of diaphragm 12 (Fig. 98). The pressure in chamber *B*, being unable to equalize quickly with that in chamber *A*, on account of the snug fit of the stem 10 in bushing 9, is now greater than the pressure in chamber *A*. The diaphragm 12 and the stem 10 attached to it are lifted, uncovering the port in the bushing 7. The stem is lifted sufficiently to allow air from chamber B and the air coming through port *c* to pass out at *e* and through the pipe to the whistle (Fig. 100), causing a blast as long as the stem 10 is off its seat.

Digitized by Google

The same wave reduction that started the signal valve into operation also opened the reducing valve (Fig. 99) to allow main-reservoir pressure to supply the whistle line.

A wave of increased pressure now takes the place of the reduction wave, and air passing into chamber *A* of the signal valve forces the diaphragm 12 down, causing the whistle to cease blowing.

Q. How long must we wait before again trying to put the signal valve in operation?

A. Until the pressures have had time to equalize in chambers *A* and *B* (Fig. 98).

Q. How many seconds should we wait?

A. Usually two at least, and three is better.

Q. Give a rule by which we can pull the whistle signal cord in the car and gain the best results.

A. When pulling the cord, make an exhaust of one second, and then wait three seconds to allow the whistle to cease blowing and the pressures to equalize throughout the signal system before making another reduction.

Q. In pulling the signal cord, what should always be borne in mind?

A. That it is not the amount of reduction but the suddenness that causes the whistle to blow.

PECULIARITIES AND TROUBLES OF THE SIGNAL SYSTEM.

Q. If no air gets into the signal pipe when an engine is coupled to a train, and we know that the cocks in the signal pipe stand properly and the hose are in order, what should we look at first?

A. The plug cock in the reducing valve (Fig. 99); or, if

the weather is cold and the reducer is outside, it may be frozen.

Q. What else might cause this trouble with the reducer (Fig. 99)?

A. It may be that the small taper port in the reducer (Fig. 99), where the main-reservoir pressure enters, is plugged shut or the strainer may be blocked.

Q. What will close this port?

A. Oil from the air end of the pump and the corrosion from the inside of the pipes. The small ports in the reducing valve are also sometimes closed from this cause.

Q. What is the trouble if the signal cord is pulled in the car and no air issues from the car discharge valve?

A. The cut-out cock (Fig. 95) in the saloon has very likely been closed.

Q. Give conditions that would result in the air whistle not responding.

A. A dirty strainer in the tee under the car where the branch pipe to the car discharge valve couples to the main signal pipe; the strainer in the car discharge valve, as used in the old equipment, being dirty; port *d* (Fig. 98) being stopped up; a too loose fit of stem 10 (Fig. 98) in bushing 9; a baggy diaphragm (Fig. 98), or a hole in it; the bowl of the whistle (Fig. 100) being closed with scouring material, or the bell of the whistle being improperly adjusted; a reduction that took enough air from the signal-pipe but did not take it fast enough, or, as explained before, the reducer might be frozen.

Q. Why would the whistle not respond if port d (Fig. 98) were closed?

A. No air could reach the whistle.

Q. Why, with a loose fit to stem 10 (Fig. 98) in bushing 9, would the whistle not respond?

Digitized by Google

A. If the reduction were not made sufficiently quick with the car discharge valve, especially on a long train, the friction of the air passing through the pipe would tend to decrease the suddenness of the reduction, so that, when the wave reached the signal valve, the reduction might be so weak that, if stem 10 were a loose fit in bushing 9, the air in chambers *A* and *B* might equalize without raising diaphragm 12 (Fig. 98).

Q. Why would a baggy or stretched diaphragm (Fig. 98) cause the whistle not to respond?

A. When the reduction is made in the signal pipe, a reduction is made in chamber *A* of the signal valve, leaving the pressure in chamber *B* greater. If the diaphragm is bagged, the pressure in chamber *B* lifts the diaphragm, but the stem is not moved.

Q. What causes this diaphragm to bag?

A. The use of poor rubber, or oil from the pump working through on the rubber, causing it to decay. A diaphragm is occasionally found with a hole rotted through it, allowing chambers *A* and *B* to be directly connected.

Q. What may cause a whistle to respond only once when the conductor pulls the cord twice?

A. He may have pulled the cord the second time before the whistle stopped blowing the first, thus getting one long blow, or he may have made the second discharge before the pressures in chambers *A* and *B* had become equalized.

Q. What will happen if dirt gets on the seat of valve 4 (Fig. 99)?

A. The valves cannot close, and we will get main-reservoir pressure in the signal-pipe.

Q. What effect has this?

A. The whistle is likely to blow, especially on a short train, when the brakes are released; the air whistle on the engine

Digitized by Google

will screech when used; and the whistle may blow two or three times for one reduction at the car discharge valve; there will be a stronger exhaust from the car discharge valve than usual, and hose are more likely to burst.

Q. Why is the whistle likely to blow when the brakes are released, if there is main-reservoir pressure on the whistle line?

A. Because to release brakes the main-reservoir pressure is thrown into the brake-pipe. This makes the pressure in the main reservoir less than that in the signal pipe, and, on account of the dirt on the seat of the valve (Fig. 99), the signal-pipe pressure feeds back into the main reservoir, and the reduction thus made in the signal pipe causes the air whistle to blow.

Q. Why, with this trouble, is the whistle more likely to sound on an engine alone than with a train, when the brakes are released?

A. With an engine alone there is but a small volume of air on the signal line, and the signal-pipe pressure feeding back into the main reservoir would cause a more sudden reduction than if the signal pipe were longer and the volume greater, as on a train.

Q. Why will the air whistle on the engine screech when used?

A. Because the bell is adjusted to be used with only a forty-pound pressure instead of ninety or more.

Q. Why is the whistle likely to blow two or three times with one reduction from the car discharge valve, if main-reservoir pressure is in the signal pipe and the stem 10 is loose in bushing 9 (Fig. 98) of the signal valve?

A. Because a reduction at the car discharge valve starts the signal valve in operation, and the reducer cannot feed air into the signal pipe properly to cause the signal valve

Digitized by Google

to close until the signal-pipe pressure is below forty pounds. The tendency for the pressure to fluctuate in chambers *A* and *B*, due to the loose fit of the stem 10, causes the diaphragm to bounce and the whistle to respond two or three times.

Q. If an engineer wishes to know how much pressure he has in his signal pipe, and he has no gage with which to test it, how can he determine it?

A. Shut off the pump and open the bleed cock on the main reservoir, then get up in the cab and watch the red hand. When the whistle blows, the red hand represents a trifle less pressure than is being carried in the signal pipe.

Q. Why does the whistle blow?

A. Because, when the main-reservoir pressure is drained below the pressure in the signal pipe, the pressure feeds from the signal pipe back into the main reservoir, causing a reduction of the signal-pipe pressure, and this usually causes the whistle to blow.

Q. What is likely to make a whistle give one long blast?

A. A tight fit in bushing 9 of stem 10 (Fig. 98).

Q. What will cause a whistle to sing constantly?

A. Dirt on the seat of stem 10 in bushing 7 (Fig. 98).

Q. Why may jars cause a whistle to blow?

A. Oil baking upon the diaphragm of the signal valve makes it rigid, and a jar will sometimes shake the stem from its seat.

Q. What would we do with the reducer (Fig 99) to increase or decrease the pressure in the signal pipe?

A. Screw up on the bottom nut to increase it, and down to decrease it.

Digitized by Google

CHAPTER IX.

BRAKING POWER AND LEVERAGE

Q. What is meant by braking power?

A. The force applied by the shoes against the wheels to stop the motion of a car.

Q. What is meant by the percentage braking power?

A. The total brake-shoe pressure as compared to the light weight of the car. The percentage is found by dividing the total braking power by the light weight of a car.

Q. How is the braking power determined?

A. By assuming a definite air pressure in the brake cylinder, and computing the total force developed against the wheels by the shoes due to this pressure acting against the brake cylinder piston. Formerly the maximum air pressure that could be obtained in the cylinder, was used as a basis of calculation; but since, with 70 pounds in the brake-pipe, a plain triple valve obtains 50 pounds maximum cylinder pressure, a quick-action triple valve 60 pounds pressure, the ET equipment 65 pounds pressure, etc., it is now the custom to use 50 pounds cylinder pressure uniformly as a basis of calculation of braking power in all classes of equipment. All percentages given below are based on a 50-pound cylinder pressure.

Q. What per cent of the light weight is used as braking power on a freight car using 50 pounds cylinder-pressure as a basis of calculation?

A. Sixty per cent or six-tenths of the light weight of the car.

Digitized by Google

Q. On a passenger car?

A. Eighty per cent or eight-tenths of the light weight of the car, excepting with the new high-speed brake (type L triple valve and supplementary reservoir), when ninety per cent is used.

Q. Can these percentages be used if the car has two six-wheel trucks, and only two pairs of wheels on each truck are braked?

A. No; the percentages given refer to a certain per cent of the total weight on the rails of the *braked wheels.* If only two pairs of wheels are braked on each truck, and the car rests equally on all six pairs of wheels, it is clear that the weight of the car that is supported by the braked wheels is only four-sixths of the total weight of the car. Therefore in such a case, eighty per cent (or ninety) of *four-sixths* (or two-thirds), of the total light weight of the car should be used as the braking power. Or, which is the same thing, use 2/3 of the percentages; 53 1/3 per cent (or 60 per cent) of the total light weight.

Q. What per cent braking power is used in designing driver brakes?

A. With the old standard equipments, seventy-five per cent or three-fourths of the weight on the drivers when the engine is ready for the road. With the No. 6 ET equipment, sixty per cent of the same weight is used.

Q. What per cent braking power is used on engine truck or trailer-wheel brakes?

A. With the old standard equipment sixty per cent; with the No. 6 ET equipment, forty-five per cent—of the weight of the engine in working order on them, in each case.

Q. What per cent braking power is used on tenders?

A. With old standard passenger tenders, or freight tenders equipped with quick-action triple valves, 85 per cent

Digitized by Google

of the light weight; with old standard freight tenders having plain triple valves, 100 per cent is used; with tenders equipped with No. 6 ET Equipment, 80 per cent is used.

Q. Why is a larger per cent braking power used on tenders than on engines or freight cars?

A. Because tenders are practically always loaded.

Q. How were these percentages determined on as safe?

A. By actual tests in the different kinds of service.

Q. What brake-cylinder pressure is used in figuring the braking power with the different sizes of cylinders?

A. Fifty pounds.

Q. How do we calculate the force acting on the push rod due to the pressure in the cylinder acting on the piston?

A. Multiply the diameter of the piston by itself; the product by the decimal .7854, and this last product by the air pressure in the brake cylinder.

Q. What force would act on the push rod of an 8-inch cylinder?

A. $8 \times 8 \times .7854 \times 50 = 2513$, usually figured as 2500 pounds.

Q. Explain the difference in the percentage braking power of a freight car light, and the same car when loaded to its full capacity.

A. Sixty per cent of the light weight of a freight car is considered safe braking power.

If the light weight of a freight car is 40,000 pounds, it is given 24,000 pounds braking power. If the capacity of the car is 100,000 pounds, when loaded to its full capacity the total weight of the car and contents is 40,000 + 100,000, or 140,000 pounds, but we have only the brake-shoe pressure to stop the car loaded that is used when it is light.

In full service application we obtain fifty pounds pressure

Digitized by Google

in the brake cylinder. This gives sixty per cent braking power when the car is light, but when the car is loaded, the percentage of braking power to the total weight of the car and contents is only seventeen per cent.

In emergency, we get about sixty pounds pressure in the brake cylinder which amounts to seventy-two per cent braking power with a light car; but with the car loaded, when the brakes are set in emergency. the braking power is about twenty and one-half per cent of the total weight of this car.

Q. How is the percentage braking power of a passenger car affected by its load?

A. Not very much, because eighty per cent of the light weight of the car is used as braking power, and when loaded, the additional weight is seldom as much as 10,000 pounds.

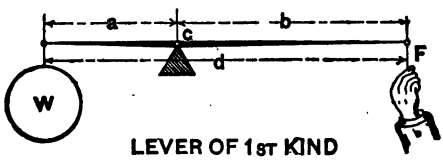

LEVER OF 1ST KIND
FIG. 101.

Q. What forces are usually figured as acting at the push rod with the different sized cylinders, the cylinder pressure being figured at fifty pounds in service and sixty in emergency with the quick-action triple, and fifty pounds with the plain triple in either service or emergency?

A. Service application:

6 in.	8 in.	10 in.	12 in.	14 in.	16 in.	18 in.
1400	2500	4000	5600	7700	10,000	12,200

Emergency application:

1700	3000	4700	6800	9200	12,000	14,700

By using the following cuts and formulæ, the braking power on a car with any kind of leverage may be figured.

Digitized by Google

There are three classes of levers:

I. When the fulcrum c (Figs. 101 and 102) is between the force F and the weight W.

II. When the weight W (Figs. 103 and 104) is between the force F and the fulcrum c.

III. When the force F (Figs. 105 and 106) is between the weight W and the fulcrum c.

Figs. 101 and 102 represent a lever of the first class.

Q. What brake-shoe pressure W will result with a force F = 2500 pounds, b = 16 inches, a = 8 inches?

A. $W = \frac{F \times b}{a}$ or $W = \frac{2500 \times 16}{8}$ or $W = 5000$ pounds.

The forces W and F act in the same direction on the levers, and the force at c acts on the lever in an opposite direction from both and must be equal to their sum, or 7500 pounds.

Q. What is the distance a if F = 2500, b = 16 inches, and W = 5000?

A. $a = \frac{F \times b}{W}$; substituting values,

$a = \frac{2500 \times 16}{5000}$ or $a = 8$ inches.

Q. What is the force F, when W = 5000, a = 8 inches, and b = 16 inches?

A. $F = \frac{W \times a}{b}$; substituting values,

$F = \frac{5000 \times 8}{16}$ or $F = 2500$ pounds.

Q. How do we find b if W = 5000 pounds, F = 2500 pounds, and a = 8 inches?

Digitized by Google

A. $b = \frac{W \times a}{F}$; substituting values,

$$b = \frac{5000 \times 8}{2500} \text{ or } b = 16 \text{ inches.}$$

Figs. 103 and 104 represent levers of the second class with the weight between the fulcrum c and the force F.

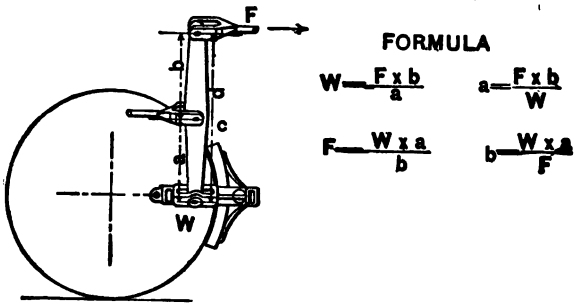

FIG. 102.—LEVER OF 1ST KIND.

Assume that $F = 2500$ pounds, $a = 8$ inches, $d = 16$ inches, and $b = a + d$, or 24 inches.

Q. What is W?

A. $W = \frac{F \times b}{a}$; substituting values,

$$W = \frac{2500 \times 24}{8} \text{ or } W = 7500 \text{ pounds.}$$

In this class of levers we see that the forces F and W act in opposite directions on the lever, and the force exerted at c will be equal to the difference between F and W, or 5000 pounds.

We may compute values for a, F or b, as was illustrated in

Digitized by Google

the first class of levers, if we know the values of the other three.

Figs. 105 and 106 represent the third class of lever with the force F exerted between the weight W and the fulcrum c.

Assume that $F = 2500$ pounds, $b = 8$ inches, $d = 16$ inches, $a = b + d$, or 24.

Q. What is W?

A. $W = \frac{F \times b}{a}$; substituting values,

$$W = \frac{2500 \times 8}{24} \text{ or } W = 833\ 1/3 \text{ pounds.}$$

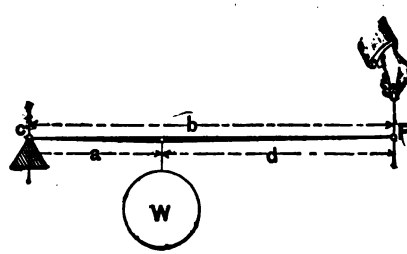

LEVER OF 2ND KIND

FIG. 103.

W and F act in opposite directions on the lever in this case, and the force exerted at the fulcrum c will be equal to the difference between F and W, or, in this case, 1666 2/3 pounds.

The other three formulæ may be used to find the value of a, F or b when the other three values are known. as already shown.

Besides speaking of levers as first, second, and third class, they are known by their proportions as 1 to 1, 2 to 1, 2½ to 1, etc., according to the amount the force F is raised or di-

minished, due to the class and proportions of the levers employed.

To find the proportion of a lever of the first class, divide the distance of the fulcrum c to the force F by the distance

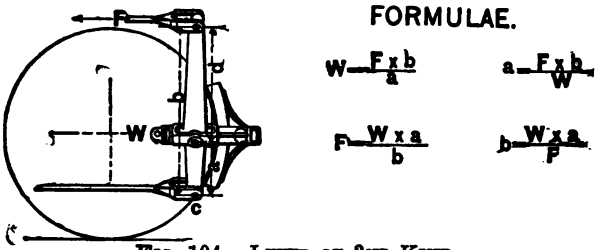

FIG. 104.—LEVER OF 2ND KIND.

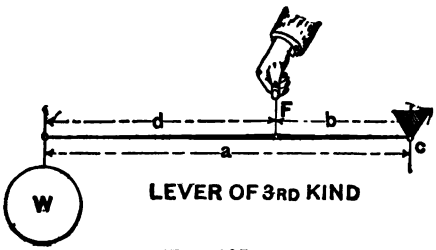

FIG. 105.

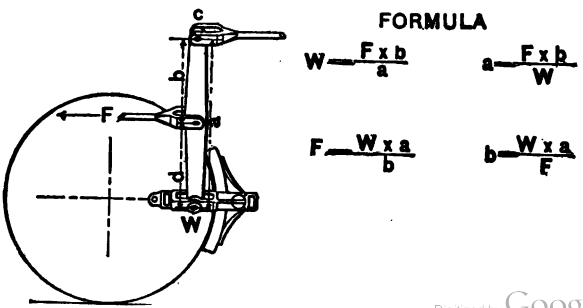

FIG. 106.—LEVER OF 3RD KIND.

Digitized by Google

from the fulcrum c to the weight W; or, referring to Fig. 101, it would be:

$b \div a$ or $16 \div 8 = 2$. This proportion of lever would be called a 2 to 1 lever.

The force F is multiplied by 2 at W.

In the second class, or Fig. 103, the proportion of the lever would be represented by: $b \div a$ or $24 \div 8 = 3$, or a 3 to 1 lever.

In the third class, or Fig. 105, the proportion of the lever would be represented by: $b \div a$ or $8 \div 24 = 1/3$, or a 1/3 to 1 lever, in which case the proportion and class of levers *reduces* the force 3 to 1 instead of increasing it.

Having studied the classes of levers, we will now make a practical application of their use in figuring the proportion of the levers to be applied to a car of given weight.

We wish to design a brake for a passenger car, the weight of which is 60,000 pounds, and use the Hodge system of levers as shown in Fig. 107.

Eighty per cent, or eight-tenths of 60,000 pounds is 48,000 pounds. 48,000 pounds will be the braking power to apply to the wheels of a passenger car weighing 60,000 pounds.

$48,000 \div 4 = 12,000$, or the amount of braking power to be developed at each brake beam.

The length of the truck levers has to be determined from the truck construction. We will suppose the dimensions to be—long end, 28 inches; short end, 7 inches.

The truck levers are of the second class and substituting the values in the formula (Fig. 104).

$$F = \frac{W \times a}{b} \text{ or } F = \frac{12,000 \times 7}{35} \text{ or } F = 2400$$

That is, to get a power W of 12,000 pounds against the brake beam, a force of 2,400 pounds is necessary at the top of the live truck lever.

Digitized by Google

The forces F and W act on the live lever in opposite directions, so the force acting at fulcrum c will be 12,000 — 2400 = 9,600. This power is transmitted to the bottom of the dead lever, which is of the same class as the live lever; but the force F is applied at the bottom instead of the top of the lever.

We have from Fig. 104:

$$W = \frac{F \times b}{a} \text{ or } W = \frac{9{,}600 \times 30}{24} \text{ or } W = 12{,}000$$

So that, with a force of 2,400 pounds acting at the top

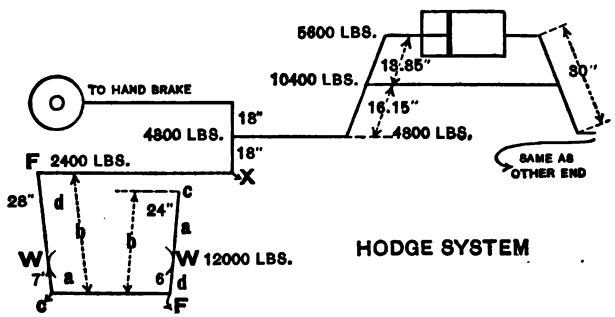

FIG. 107.

of the live lever of the dimensions given, a power W of 12,000 pounds is developed at each truck brake beam.

The dead truck lever need not be of the same length as the live lever, but the proportions between the holes must be the same in each.

The force of 2,400 pounds that acts on the top of the live lever also acts at X, the end of the floating lever, and we must now determine what force must act on the rod that connects the end of the cylinder lever with the floating lever.

This rod is connected at the middle of the floating lever,

Digitized by Google

and the power at this point must be sufficient to develop a force of 2,400 pounds at each end of the floating lever.

The force exerted at the middle must be 2 × 2,400 or 4,800 pounds, as half of this amount is given to each end of the floating lever.

This 4,800 pounds acting at the center of the floating lever must also act at the end of the cylinder lever, being connected directly with it.

What we now wish to determine is, with any desired length over all, how must the holes be spaced in the cylinder lever that the pressure acting on the push rod will produce a force of 4,800 pounds at the outer end of the cylinder lever.

With any brake equipment except the new high-speed brake, a 12-inch cylinder is recommended by the Westinghouse Company to be used with this weight of car. With a 50-pound cylinder pressure, the 12-inch cylinder gives a push at the piston rod of 5,600 pounds. We will suppose the distance between the outside holes of the cylinder lever to be 30 inches.

The following rule will enable us to locate the middle hole in the cylinder lever to which the tie rod is attached.

Multiply the force acting at the piston by the length of the lever between the outside holes, and divide the product by the sum of the forces acting at both ends of the cylinder lever. The result will be the distance from the middle hole of the cylinder lever to the hole to which the connection running to the floating lever is attached.

Applying this rule to our problem we have

$$5{,}600 \times 30 = 168{,}000$$
$$5{,}600 + 4{,}800 = 10{,}400$$
$$168{,}000 \div 10{,}400 = 16.15$$
$$30 - 16.15 = 13.85$$

The distance between the holes at the short end is 13.85 and the long end 16.15 inches, and, according to the rule, the

long end is connected to the connection running to the floating lever.

The force exerted at the middle hole of the cylinder lever is also communicated to a hole similarly placed in the other cylinder lever, so, that, using the same levers, we will obtain the same braking power on the wheels of the other truck.

In figuring the levers for the Stevens system of leverage, the power desired at the top of the live lever is figured the same as just explained.

When we know this force, we know that the same power has to exist at the outer end of the cylinder lever, as the Stevens system has no floating lever.

This we figure by the rule already given for spacing the holes in the cylinder levers.

To figure the braking power of a car already equipped, we start with the force acting on the piston rod and work towards the truck levers by the aid of the formulæ given.

To use the formulæ, first determine the class of lever with which we have to deal.

The foregoing illustrations were practical applications of the formulæ, in calculating the proportion of levers that would give a proper braking power on a car of known weight.

We will now consider a shorter method of calculating the proportion of levers for a Hodge and for the Stevens systems of leverage for this same car.

Fig. 107 (page 283) shows the Hodge system of levers. If this were a Stevens system, the floating lever would not be used, and the other end of the connection to the live lever of the truck would connect directly with the outer end of the cylinder lever. With the Stevens system the hand-brake connection runs from the brake mast direct to the top of the dead lever.

(1.) *To find the total braking power required*:

For any equipment except the new high-speed brake, sub-

Digitized by Google

tract 20 per cent. of the weight of the car on the wheels to be braked for passenger cars, and 40 per cent. for freight cars. For passenger cars with the new high-speed brake, subtract 10 per cent.

(2.) *To find the total leverage required*:

Divide the total braking power required by the total pressure on the piston, 50-pound cylinder pressure taken as a basis of calculation. The total leverage should usually not exceed 9 to 1.

(3.) *To find the proportion of the brake-beam levers*:

Divide the entire length of the lever by the short end, if the truck has a bottom connection; if it has a middle connection, divide the long by the short end.

(4.) *To find the total brake-beam leverage*:

Multiply the proportion of the brake-beam levers by two, for the Hodge system, and by four for the Stevens system.

(5.) *To find the proportion of the cylinder lever*:

Multiply the whole length of the lever by the required total leverage and divide the product by the sum of the total brake-beam leverage plus the required total leverage.

If the required total leverage is greater than the total brake-beam leverage, the long end of the lever must go next to the cylinder; if less, the short end goes next to the cylinder.

The dead and live truck levers may be of different lengths, but must be of the same proportion to develop the same braking power.

EXAMPLE.

Hodge system of levers, as shown on page 283, also the lengths of the truck levers.

Weight of car, 60,000 lbs. Old-style standard brake equipment used.

A 12-inch cylinder is used with this weight of car.

A pressure of 5,600 lbs. is developed on a 12-inch piston, using 50-pound cylinder pressure as a basis.

Digitized by Google

(1.) 60,000 lbs. less 20 per cent. is 48,000 lbs.
(2.) 48,000 lbs. $\div$ 5,600 $=$ 8.57, total leverage required.
(3.) $35 \div 7 = 5$, brake-beam leverage.
(4.) $5 \times 2 = 10$, the total brake-beam leverage.

Assume the length of the outside holes of the cylinder lever to be 30 inches.

(5.) $(30 \times 8.57) \div (8.57 + 10) = 13.85$ inches.
$30 - 13.85 = 16.15$ inches.

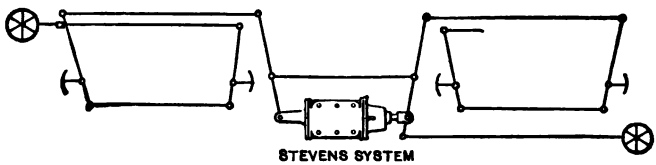

STEVENS SYSTEM
OF
CAR BRAKE LEVERS

FIG. 108.

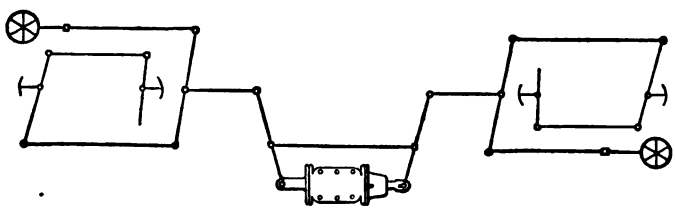

HODGE SYSTEM
OF
CAR BRAKE LEVERS

FIG. 109.

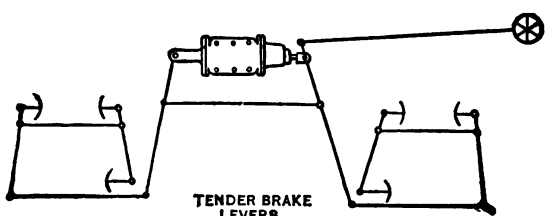

TENDER BRAKE
LEVERS

FIG. 110.

Digitized by Google

The required leverage is less than the total brake-beam leverage, hence the short end of the cylinder lever connects to the piston.

Stevens system—same car.

(1.) 60,000 lbs. less 20 per cent. is 48,000 lbs.

(2.) $48{,}000 \div 5{,}600 = 8.57$, total leverage required.

(3.) $35 \div 7 = 5$, the brake-beam leverage.

(4.) $5 \times 4 = 20$, the total brake-beam leverage.

The cylinder lever is 30 inches between outside holes.

(5.) $(30 \times 8.57) \div (20 + 8.57) = 9$ inches.

$30 - 9 = 21$ inches.

The required leverage is less than the total brake-beam leverage, hence, according to the rule, the short end of the cylinder lever (9 inches) connects to the piston.

Q. Give a rule by which the braking power on practically any engine, tender or car can be calculated.

A. Multiply the force acting by the distance from the force to the fulcrum, and divide this product by the distance from the work to the fulcrum; the result will be the work that can be accomplished.

In this rule let F = force,

W = work,

a = distance from the point at which the force is applied to the fulcrum,

b = distance from the fulcrum to the point at which the work is to be accomplished.

Then we have the following formula which can be used:

$$W = \frac{F \times a}{b}$$

Q. What must be determined to use this rule intelligently?

A. It must always first be determined which point on any

Digitized by Google

lever is the fulcrum. For instance, in considering the piston lever (Fig. 107) the fulcrum is the rod which connects the piston and cylinder levers when we wish to ascertain the amount of work that can be done at the outer end of the piston lever. If we wish to ascertain the amount of work that can be done on the rod connecting the piston and cylinder levers, the fulcrum would then be the outer pin in the piston lever.

To find the work accomplished on the brake shoes connected to the live truck levers (Fig. 107), the lower pin of the live lever is the fulcrum; but if we wish to know what work is done on the bottom truck connection by a force acting on the

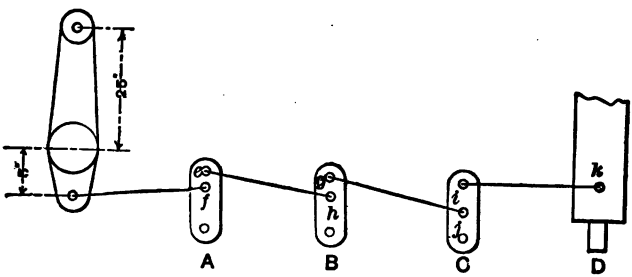

FIG. 111.—AMERICAN EQUALIZED BRAKE.

top of the live lever, the point at which the brake shoe is shown represents the fulcrum.

What has been said on the subject of brake leverage in this chapter is all useful, and a thorough understanding of it will enable one to make many short cuts in leverage problems presented for consideration, but the last very simple rule will be found to be sufficient with which to calculate the braking power in practically any system of leverage.

Digitized by Google

SIZES OF CYLINDERS TO BE USED ON CARS AND TENDERS OF THE FOLLOWING MAXIMUM LIGHT WEIGHTS, AS RECOMMENDED BY THE WESTINGHOUSE AIR-BRAKE COMPANY.

PASSENGER CARS.

Size of Cylinder.	Standard Equipments, Including Old Style High-speed Brake.	New Style High-speed Brake Equipments.
8″	16,000 to 28,000	16,000 to 25,000
10″	28,000 to 44,000	25,000 to 39,000
12″	44,000 to 63,000	39,000 to 56,000
14″	63,000 to 86,000	56,000 to 77,000
16″	86,000 to 113,000	77,000 to 100,000
18″	113,000 to 143,000	100,000 to 127,000

FREIGHT CARS.

Size of Cylinder.	Any Freight Equipment.
8″	22,000 to 37,000
10″	37,000 to 58,000

TENDERS.

Size of Cylinder.	Old Standard Equipment. With Quick-action Triple Valve.	Old Standard Equipment. With Plain Triple Valve.	E T Equipment.
8″	15,000 to 26,000	15,000 to 22,000	15,000 to 28,000
10″	26,000 to 41,000	22,000 to 35,000	28,000 to 44,000
12″	41,000 to 59,000	35,000 to 50,000	44,000 to 63,000
14″	59,000 to 81,000	50,000 to 69,000	63,000 to 86,000
16″	81,000 to 106,000	69,000 to 90,000	86,000 to 113,000

AMERICAN BRAKE LEVERAGE.

Q. How do you find the braking power on an engine equipped with the American equalized brake as shown in Fig. 111, page 289?

A. Multiply the cylinder value, or total push on the piston, by the long lever arm, and divide this product by the

short lever arm. This result multiplied by 2 gives the total braking power.

Q. With the long lever arm 25 inches long and the short arm 5, what braking power would we have, using 12-inch cylinders?

A. 56,000 pounds.

Thus:

$$5{,}600 \times 25 = 140{,}000$$
$$140{,}000 \div 5 = 28{,}000$$
$$28{,}000 \times 2 = 56{,}000$$

Q. If any different design of rigging were used than that shown in the sketch, how could the braking power be figured?

A. First find the power exerted at the bottom of the rocker shaft and use this in connection with the cuts illustrating the different classes of levers.

Q. What per cent of the total weight on drivers is used as braking power with driver brakes?

A. Seventy-five per cent of the engine's weight on the drivers when ready for the road, when the old standard equipment is used, and sixty per cent when the ET equipment is used.

Q. What braking power should be used on an engine whose weight on drivers is 90,666 pounds, using the old standard brake equipment?

A. $90{,}666 \times .75 = 68{,}000$ pounds.

Q. What weight should be on the drivers for an engine to have 68,000 pounds braking power, using the old standard brake equipment?

A. $68{,}000 \div .75 = 90{,}666$ pounds.

Q. How should the holes be spaced in levers A and D on an engine having two pairs of drivers, to give an equal braking power on each wheel?

Digitized by Google

A. The middle hole in *A* should be equidistant from the two outside ones. The hole in the lever at *D* should be so as to have the connection attached at *k* stand about parallel with the track. The corresponding hole *k* at the other end of the lever *D* must be placed the same distance from the other end.

Q. How should the holes be spaced in levers A, B and D, if on a mogul or engine having three pairs of drivers?

A. The distance *e*, lever *A*, should be one-half the distance *f*. The distance *g*, lever *B* should be equal to *h*. The hole *K*, lever *D*, should be the same as on an engine having two pairs of drivers.

Q. How should the holes in the levers A, B, C and D be spaced on a consolidation or engine with four pairs of drivers?

A. The distance *e* in lever *A* should be one-third of *f*. The distance *g*, lever *B*, should be one-half of *h*. The distance *i*, lever *C*, should be equal to *j*. The hole *k* in lever *D* should be the same as with an engine having two or three pairs of drivers.

CAM BRAKE.

The following simple rule to find the braking power developed by a cam brake is given by Mr. H. A. Wahlert.

Take two wires and place them between the brake shoe and the wheel; one at the top and one at the bottom of the shoe. Apply the brakes fully, and then measure the piston travel. Now release the brakes, recharge, remove the wires, and then apply fully again. Measure the piston travel again, and note how much more it has increased. Divide the additional travel had upon removing the wires by the thickness of the wire, and multiply this by the value of the cylinder. The result is the braking power on each brake shoe.

Digitized by Google

Four times this power is the total braking power developed on all four shoes.

EXAMPLE.

Thickness of wires, 1/8 inch.

Piston travel, with wires inserted according to rule, 3 inches.

Piston travel, with wires removed, 3 1/2 inches.

Value of 8-inch cylinder, 2,500 pounds.

3 1/2 inches — 3 inches = 1/2 inch.

1/2 inch ÷ 1/8 inch = 4.

2,500 pounds × 4 = 10,000 pounds on each brake shoe.

10,000 pounds × 4 = 40,000 pounds on all four brake shoes.

AIR HOSE.

Q. What kinds of hose are used in the air brake and signal systems?

A. Usually one-inch hose is used with signal equipment on cars in passenger, mail, and express service; while inch and three-eighths hose is used exclusively in freight service.

Q. Is this a standard on all roads?

A. No; some roads use the inch and three-eighth hose with the brake equipment in both freight and passenger service.

Q. Would there be any objection to using one-inch hose in freight service?

A. The chief objection consists in the fact that the small hose presents a greater frictional resistance to the passage of air. This would be especially objectionable when it was desired to make a quick reduction to apply the brakes in quick action.

Q. What is the object of having different hose couplings for the air and signal hose?

Digitized by Google

A. So that brakemen, when in a hurry, cannot couple the brake and signal hose together; some companies paint the signal hose coupling red as a further aid when coupling hose.

Q. How many cars of air are coupled up and operated?

A. Some roads regularly couple as high as 115 cars and operate the brakes with the air supplied by a nine and one-half inch pump.

Q. Could this be done with a poor hose?

A. No, since with poor hose there is often considerable leakage not discernible with the naked eye.

Q. How may porous hose be detected?

A. By coating the outside with soapsuds.

Q. What is the usual life of air hose?

A. Passenger, about two and one-half years; freight, about two years.

Q. How is air hose bought?

A. Some on account of cheapness, some by a time guarantee, and others by specification, the roads being willing to assume the risk in the latter case if they know the hose to be first-class when put in service.

Q. What is the object of the markings shown on the hose (Fig. 112)?

A. It is for the purpose of obtaining a record of the life of the hose. The one applying the hose should cut off the figure representing the month, in the line headed by the letter *A*, and the figure which shows the year. When the hose is removed the year and month should also be shown by cutting off the proper numbers.

The following specifications have been recommended by the Master Car Builders' Association. They have been in force for some time on the railroads throughout the country, and constitute a definite standard for interchange.

Digitized by Google

AIR-BRAKE AND SIGNAL-HOSE SPECIFICATIONS ISSUED BY THE MASTER CAR BUILDER'S ASSOCIATION IN 1905.

1. All air-brake hose must be soft and pliable, and not less than two-ply nor more than four-ply. They must be made of rubber and cotton fabric, each of the best of its kind made for the purpose. No rubber substitutes or short-fibre cotton to be used.

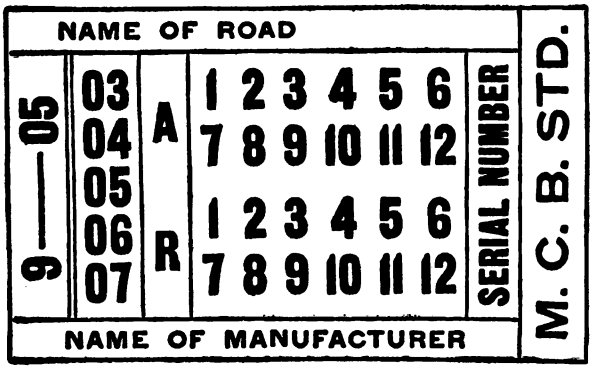

FIG. 112.—STANDARD LABEL FOR AIR HOSE.

2. The tube must be hand-made, composed of three calendars of rubber. It must be free from holes and imperfections, and in joining must be so firmly united to the cotton fabric that it can not be separated without breaking or splitting the tube. The tube must be of such composition and so cured as to successfully meet the requirements of the stretching test given below; the tube to be not less than 3/32 inch thick at any point.

3. The canvas or woven fabric used as wrapping for the hose to be made of long-fibre cotton, loosely woven, and to be from 38 to 40 inches wide, and to weigh not less than 20 and 22 ounces per yard, respectively. The wrapping must be

frictioned on both sides, and must have, in addition, a distinct coating or layer of gum between each ply of wrapping. The canvas wrapping must be applied on the bias. Woven or braided covering should be so loose in texture that the rubber on either side will be firmly united.

4. The cover must be of the same quality of gum as the tube, and must not be less than 1/16 inch thick.

5. Hose is to be furnished in 22-inch lengths. Variations exceeding ¼ inch in length will not be permitted. Rubber caps not less than 1/16 inch nor more than ⅛ inch must be vulcanized on each end.

6. The inside diameter of hose must not be less than 1⅜ inches nor more than 1 7/16 inches, nor must the outside diameter exceed 2⅛ inches. Hose must be smooth and regular in size throughout its entire length, except at a point 2½ inches from either end, where the inside calendar of rubber may be increased 1/16 inch for the distance of ¼ inch toward either end and then tapering to regular diameter.

7. Each length of hose must have vulcanized to it a badge of white or red rubber as shown. On the top of the badge the name of the purchaser; on the bottom the maker's name; on the left-hand end the month and year of manufacture, and on the right-hand end the serial number and the letters "M. C. B. Std." These letters and figures must be clear and distinct, not less than 3/16 inch in height, and stand in relief not less than 1/32 inch, so that they can be removed by cutting without endangering the cover. Each lot of 200 or less must bear the manufacturer's serial number, commencing at (1) on the first of the year, and continuing consecutively until the end of the year.

For each lot of 200, one extra hose must be furnished free of cost.

8. Test hose will be subject to the following tests:

Google

BURSTING TEST.

The hose selected for test will have a section five (5) inches long cut from one end and the remaining seventeen (17) inches will then be subjected to a hydraulic pressure of 100 pounds per square inch, under which pressure it must not expand more than ¼ inch nor develop any small leaks or defects. The section will then be subjected to a hydraulic pressure of 400 pounds per square inch for ten minutes, without bursting.

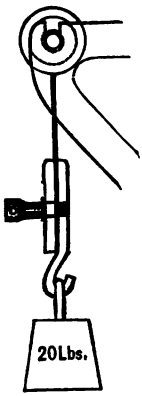

FIG. 113.

FRICTION TEST.

A section one (1) inch long will be taken from the five (5) inch piece previously cut off, and the quality determined by suspending a 20-pound weight to the separated end, the force being applied radially, and the time of unwinding must not exceed eight (8) inches in ten minutes.

STRETCHING TEST.

Another section one (1) inch long will be cut from the balance of the five (5) inch piece, and the rubber tube or lining will be separated from the ply and cut at the lap. Marks two inches apart will be placed on this section, and then the section will be quickly stretched until the marks are eight (8) inches apart and immediately released. The section will then be re-marked as at first and stretched to eight (8) inches and will remain so stretched ten (10) minutes. It will then be released, and ten (10) minutes later the distance between the marks last applied will be measured. In no case must the test piece break or show a permanent elongation of mo-

Digitized by Google

than ¼ inch between the marks last applied. Small strips taken from the cover or friction will be subjected to the same tests.

9. If the test hose fails to meet the required tests, the lot from which it was taken may be rejected without further examination and returned to the manufacturer who shall pay the freight charges in both directions. If the test hose is satisfactory the entire lot will be examined, and those complying with the specifications will be accepted.

Digitized by Google

CHAPTER X.

THE SWEENEY COMPRESSOR

Q. What is the object of the Sweeney device?

A. To recharge a main reservoir quickly in descending very heavy grades when the air pressure is low.

Q. Explain the parts.

A. It consists of a pipe running from the steam chest to the main reservoir. In the pipe there is a cut-out cock, a safety valve, and a non-return check.

Q. How is it operated?

A. By turning the cut-out cock and reversing the engine when steam is shut off. The main cylinders and pistons act as compressors, and compressed air is forced into the steam chest and thence through the pipe connection to the main reservoir.

Q. What is the objection to this device?

A. It is extremely handy in case of emergency, such as low pressure or the refusal of a pump to work. The objection to it is, that smoke, gas, and heat forced into the main reservoir burn out gaskets and get the brake system very dirty.

THE WATER BRAKE.

Q. What is the Water or La Chatelier Brake?

A. It is a brake by means of which the equivalent effect of reversing an engine is produced; that is, the back pressure on the pistons acts through the pins the same as when using steam.

Digitized by Google

Q. Is water actually used at the point where the work of retardation is accomplished?

A. No, it is then in the form of wet steam.

Q. Where does the water used come from?

A. It is taken from the boiler just above the crown sheet. The pressure from above being removed as soon as it leaves the boiler it flashes into wet steam. The compression to which it is subjected in the cylinders produces heat that also tends to change any water into steam.

Q. Is the lubricator shut off when the water brake is in use?

A. No, it should be kept in operation the same as when using steam.

Q. What special care should be taken when using steam after the use of the water brake has been discontinued?

A. To avoid throwing water out of the stack, steam should not be used until the water has had ample time to work out.

Q. Can a water brake be used on either a simple or compound engine?

A. Yes; Fig. 114 shows its application to a simple and Figs. 115 and 116 to a compound engine.

WATER BRAKE ON SIMPLE ENGINE.

Q. What part does the water play after it takes the form of wet steam?

A. As the pistons move back and forth the wet steam in the exhaust cavities (Fig. 114) is drawn into the cylinders.

Q. How does it escape from the cylinders?

A. Through the cylinder cocks.

Q. If it were not for the wet steam being drawn into the cylinders when the engine is reversed, while using the water brake, what would happen?

A. Cinders and smoke would be drawn into the cylinders

and in a short time they would be cut and ruined.

Q. How should an engineer proceed to put the water brake in use?

A. The cylinder cocks should first be opened and should

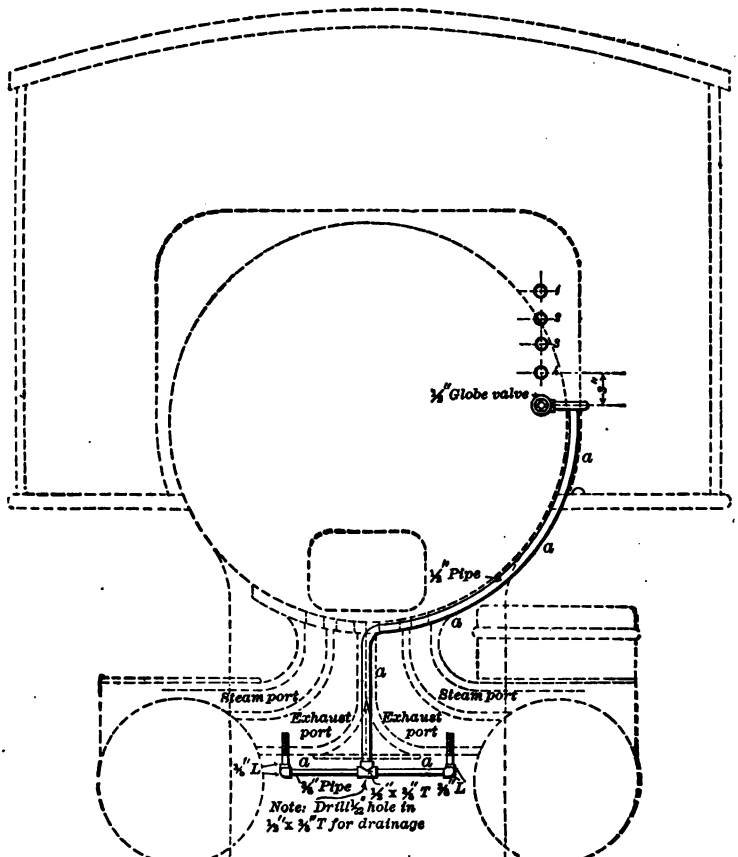

FIG. 114.—WATER BRAKE ON SIMPLE ENGINE.

Digitized by Google

remain open as long as the water brake is in use; the reverse lever should be moved back of the center the desired amount and the globe valve (Fig. 114) should be opened immediately.

Q. When should the water brake be put in use?

A. When the train is moving slowly.

Q. At how fast a speed is it practical to operate a water brake?

A. It is not generally used at speeds in excess of 14 to 22 miles per hour.

Q. How far should the reverse lever be moved back of the center?

A. This depends upon the amount of work that is required. The farther back the lever is moved the greater the power.

Q. How much should the globe valve (Fig. 114) be open to obtain the right amount of steam in the cylinders?

A. It should be adjusted until the steam issuing from the cylinder cocks is a dense white.

Q. What will be the character of escaping steam at the cylinder cocks if too little water is being used?

A. It will be a light blue in color.

Q. How can it be told if too much water is being used?

A. Water will be thrown out of the stack. This is especially noticeable if the lever is very near the center.

Q. What is the purpose of the 1-32-inch hole drilled in the ½ x ⅜-inch tee, as indicated (Fig. 114)?

A. To permit any condensation to escape.

Q. In erecting the piping what special care should be observed?

A. Care should be exercised to locate the ½" x ⅜" tee in the center to insure the same amount of water reaching

Digitized by Google

each cylinder; otherwise the tendency would be for one side of the locomotive to furnish more retarding power than the other.

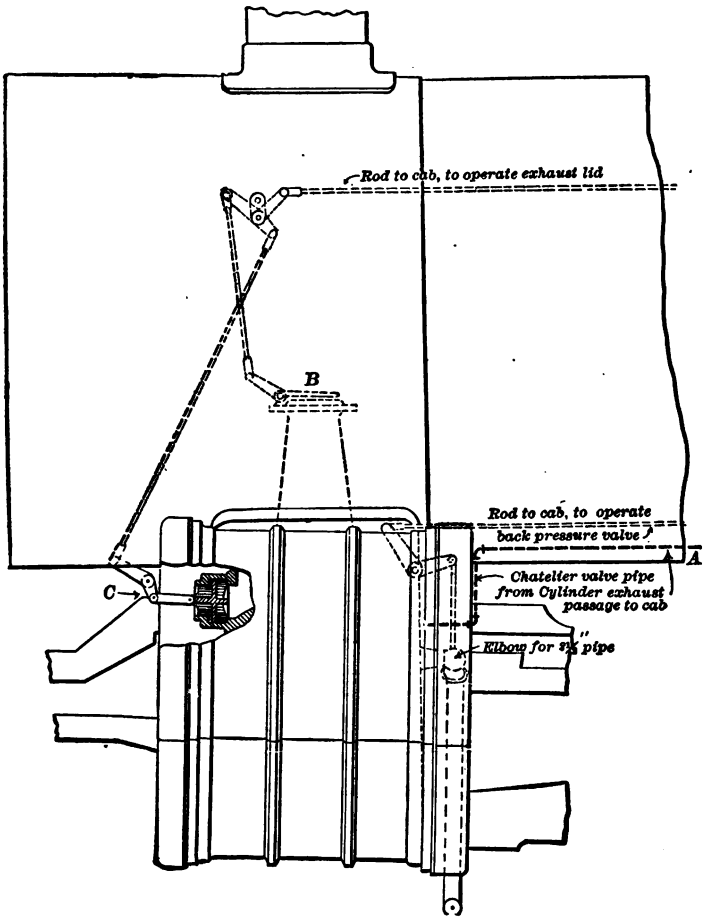

FIG. 115.—BALDWIN WATER BRAKE FOR COMPOUND ENGINE.

Digitized by Google

THE BALDWIN WATER BRAKE FOR BALDWIN COMPOUNDS.

Q. Does what has been said in general concerning the water brake for a simple engine also refer to the Baldwin Water Brake?

A. Yes, and with this as with the other, the holding power

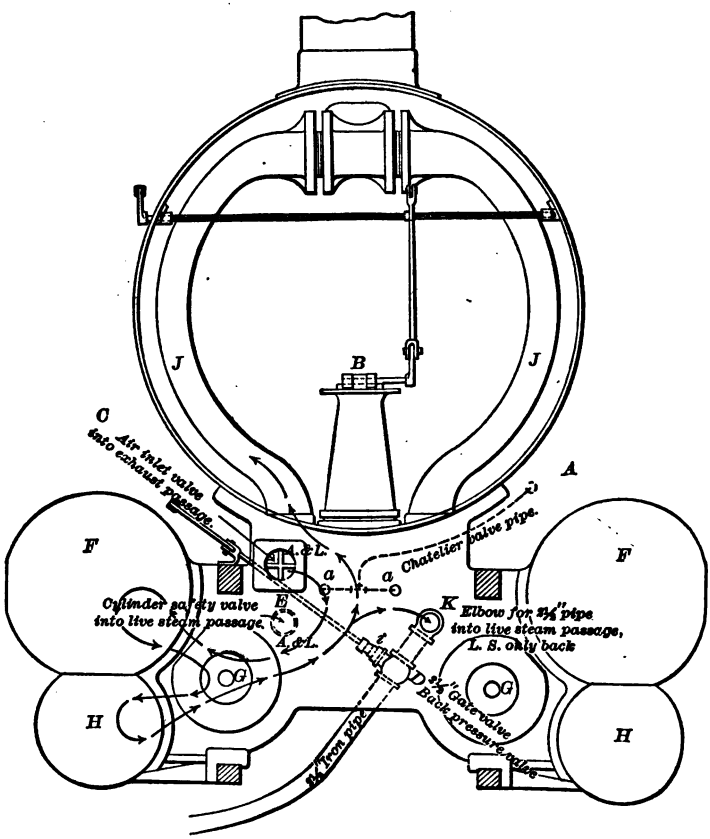

FIG. 116.—BALDWIN WATER BRAKE FOR COMPOUND ENGINE.

is due to the engine being run reversed, but in full reverse position, the water being used as herein explained.

Q. Explain the cuts (Figs. 115 and 116) referring to the water brake for compounds.

A. Fig. 115 is a side view of the front end and Fig. 116 is an end view. When water is permitted to enter pipe *A* (Figs. 115 and 116) it finally reaches *a a*, where it enters the exhaust passages. *D* (Fig. 116) is a gate or back pressure valve, by means of which the engineer can regulate the amount of back pressure against which the pistons will operate. *E* is a safety valve located in the live steamways to permit any back pressure above a given amount to escape. *C* (Figs. 115 and 116) are air inlet valves, which when necessary permit air to enter the cylinders and prevent smoke and cinders from being drawn in. *B* (Fig. 115) is a hinged lid used to close the exhaust nozzle.

Q. How is the brake put to work?

A. The initial steps are the same as with the water brake on simple engines: open cylinder cocks, put reverse lever in extreme backward position, and open the water valve. The exhaust nozzle lid *B* should also be closed, and the air inlet valves *C* be opened.

Q. Trace the passage of the water or steam.

A. As air enters the inlet valve *C* (Fig. 115) it mingles with the hot water and steam entering the exhaust cavities from *a a*. From here it passes by the piston valve *G* and enters the low pressure cylinder. When the movement of the piston in the low pressure cylinder is reversed this combination of steam, water and air, excepting that which escapes at the cylinder cocks, is compressed while the other end of the cylinder is being filled. The steam being compressed passes by piston *G* and on, as indicated (Fig. 116), into the opposite end of the high-pressure cylinder *H*. On the return

Digitized by Google

stroke of the piston it is forced from the high-pressure cylinder by the piston valve and on into the steam pipe *J J*, where what does not escape at the back pressure valve *D* accumulates. The safety valves *E* take care of any pressure in excess of a safe amount.

Q. How is the water brake operated on a two cylinder compound of the Schenectady type?

A. Generally two water pipes are used on account of the vast difference in the sizes of the two cylinders, and the exhaust valve between the receiver and the low pressure exhaust passage is left closed while using the water brake. Otherwise the water brake is used practically the same as on a simple engine.

LUBRICANTS.

Q. What lubricants should be used in the different brake apparatus?

A. Steam Cylinder of Pump—Valve Oil.
Air Cylinder of Pump—Valve Oil.
Brake Valve—High-grade Machine Oil.
Triple Valve and High-speed Reducing Valve—High-grade Mineral Oil in the cylinder, and a very fine dry graphite on the slide valve.
Brake Cylinder—A light grease that will not flow in Summer or become thick in Winter.

AIR-BRAKE RECORDING GAGES.

Q. What is an air-brake recording gage?

A. It is a mechanism by means of which lines are traced upon a chart. An examination of these lines will tell exactly how the brakes have been manipulated by the engineer.

Q. What causes the lines to be traced upon the chart?

A. The contrivance has an arm containing a pen which is raised or lowered as the pressure fluctuates in the place to which the gage is piped. As the pen and chart move, a line is traced showing the variation of the pressure.

Q. What causes the chart to move?

A. It is connected with a clock movement, by the adjustment of which the movement of the chart is controlled.

Q. To what else is the recording gage similar?

A. To a steam indicator; but in that case steam instead of air causes the pen to rise or lower as the pressure changes, and the movement of the main steam piston imparts a movement to the indicator drum upon which paper is fastened, and upon which a line is traced by a pen or pencil.

Q. To what part of the air-brake system is the recording gage piped?

A. It may be piped to the brake-pipe the auxiliary reservoir, or the brake cylinder. On a passenger train, the gage is usually placed at the rear of the train, while on a freight train it is placed in the caboose.

Q. Which of these places is preferred?

A. The brake-pipe. So connected, the chart shows the fluctuation of pressure when the brakes are applied and released, and the exact habits of the engineer are shown.

Q. From the record made by a recording gage, what may be ascertained?

A. The amount of brake-pipe pressure carried; the correctness of the air gage; the method employed by the engineer in the application and release of the brakes; the position of the brake-valve handle in releasing brakes and recharging the train; it is a valuable adjunct in finding the cause of air-brake wrecks or "failures"; shows if the air-brake instruction of the road is lived up to; shows how long it takes to recharge with the different main reservoirs and pumps on the different

Digitized by Google

engines; it is a valuable aid in discovering the cause of slid flat wheels; it increases the interest of the engineers in air-

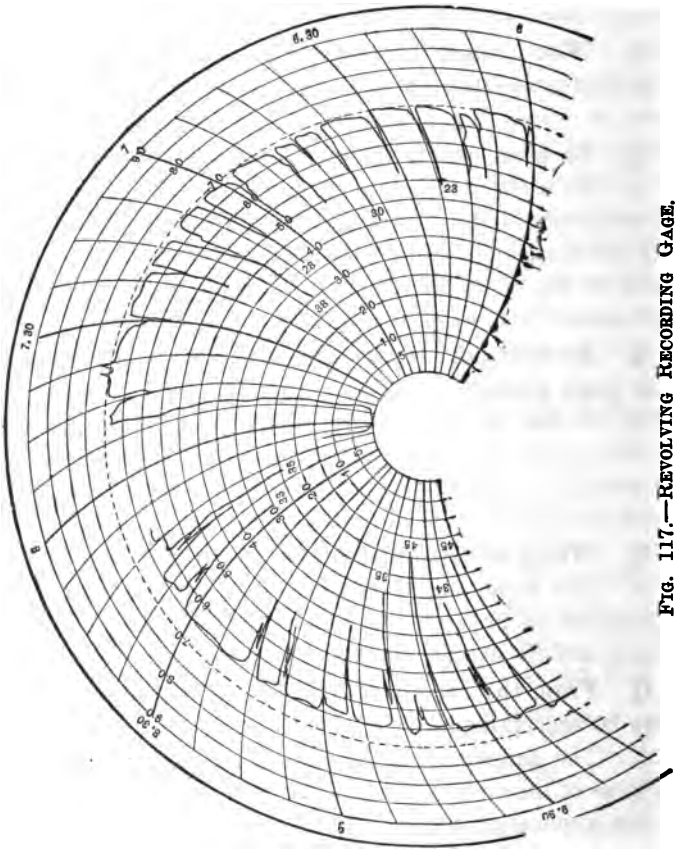

FIG. 117.—REVOLVING RECORDING GAGE.

brake matters, as their record and skill are shown by the lines on the chart; besides these things, a great deal of kindred information may be gleaned by a careful study of the charts.

Digitized by Google

Q. At what speed does this chart usually move?

A. From two and one-quarter to four and one-half inches an hour, as desired, any choice can be met by the manufacturers. The speed can be adjusted by means of the clock.

Q. Is there any advantage gained from a slow or fast movement of the paper?

A. A slow movement condenses the record and does not require so large a chart, while a fast movement uses a larger chart, but shows a greater corresponding amount of detail. If a slow movement is used, and the detail is desired at any particular point, such as a water crane or milk depot, the speed of the paper may be adjusted as desired.

In Fig. 117, the broken line shows the path the pen would trace if there was a constant pressure of 70 pounds. No pressure is represented by the circumference of the small circle.

The figures at the top are a time reference and the figures up and down refer to the amount of pressure.

The distance between the lines running up and down represent the time element. The chart (Fig. 117) shows two records on the same run made by two different men. A study of the two shows several points of interest.

The best work shows on the card to the right; the card at the left shows that the feed valve was not adjusted properly for a 70 pound brake-pipe pressure, or else the gage was wrong; the card at the right shows three station stops where the engineer made more than a 20 pound brake-pipe reduction, while the card at the left shows the same thing at six stations, and at almost every station the stop was made by two applications of the brake. The amount of reduction points very strongly to the use of the emergency.

Digitized by Google

CHAPTER XI.

TRAIN INSPECTION

Q. Why is train inspection necessary?

A. To find and remedy, before trying to handle the train on a grade, any defects that would render its handling unsafe; part of the pistons may be out against the cylinder heads when the brakes are applied, the retaining valves may be poor, some brakes may not apply, auxiliaries may not charge, leaks may exist, the brakes may go into emergency when trying to make a service application, and many other defects may exist.

Q. Where should we begin to get a train ready?

A. At the rear.

Q. Is it wrong to start at the head end?

A. It would not be were the cocks not opened between the tender and cars. If the cocks were opened, the air would blow through and out of a chance open cock, and a loss of time and air would result.

Q. Commencing at the rear, what should be done first?

A. The rear angle cock must be closed and the hose hung up.

Q. What harm is there in allowing the hose to drag?

A. It collects dirt and cinders, which are blown into the train and help to close strainers, and which work into the triples and cause them to wear faster. In winter, ice getting into the hose may block it.

Q. What should we do as we go towards the engine?

A. See that the retainer handles are turned down, hand

Digitized by Google

brakes released, hose coupled, and cocks turned so that the cars are cut in.

Q. How does the cock in the cross-over pipe, connecting the brake pipe to the triple, usually stand when the car is cut in?

A. At right angles to the pipe.

Q. How should the angle cocks stands at the end of the car when cut in?

A. Parallel with the pipe.

Q. Do the angle cocks and cut-out cocks always stand as just described?

A. No; sometimes in just the reverse positions.

Q. Why is this?

A. These are cocks used with very old equipment and may be readily recognized, as they differ in shape from those now employed. If in doubt, look at the crease in the top of the plug, which always stands parallel to the opening in the valve.

Q. What should we always do before coupling the hose between the engine and cars?

A. Blow out the brake-pipe on the engine to get rid of dirt and water.

Q. After coupling the hose and turning the angle cocks, are we ready to look over the brakes?

A. No, not until the pump has charged the train.

Q. With a constant pressure of seventy pounds in the brake pipe, how long should it take to charge one auxiliary reservoir from zero to seventy pounds with the modern equipment?

A. About seventy seconds.

Q. How long does it take to charge a train of twenty cars?

A. This depends on the condition of the pump and the

Digitized by Google

leaks in the train. If the capacity of the pump were sufficient to keep a constant brake-pipe pressure of seventy pounds, twenty cars could be charged as quickly as one. This cannot be done, as twenty feed grooves usually take air from the brake-pipe faster than the pump will supply it.

Q. Who should tell when it is time for the test?

A. The engineer. He should wait until full pressure is obtained and then make a twenty-pound service reduction.

Q. What should then be done?

A. One brakeman should go over the train turning up the retainer handles, while the other examines piston travel and looks for leaks.

Q. What should the piston travel be?

A. If no rule exists on your road in regard to this, a piston travel between 5 and 8 inches will be found to give good satisfaction on ordinary grades.

Q. What should be done after the retainer handles are raised and the piston travel adjusted?

A. The engineer should be signaled to release, and then there should be a wait of fifteen or twenty seconds, to allow the brake-cylinder pressure to reduce to what the retainer holds.

Q. What should then be done?

A. The man on deck should turn down the retainer handles. If a blow issues from the retainer when the handle is turned down, the retainer is working properly. A strict count of those working should be kept. The man on the ground should walk along and see that the brakes release when the retainer handles are turned down.

Q. What should be done after the inspection is completed?

A. A report should be made to the engineer and conduct-

Digitized by Google

or, giving them a knowledge of the piston travel, the number of retainers in working order, the number of cars, the number of air cars in working order, and the tonnage and any general information concerning the condition of the train.

Q. In testing, would it do for a brakeman to open the angle cock at the rear of the train to set the brakes?

A. This is decidedly a poor practice; brakes that cannot be worked from an engine will sometimes work by opening an angle cock. If a hose lining were loose, a brakeman might apply the brakes and an engineer release them all right, while in making the reduction from the engine, the brake-pipe reduction going ahead might roll up the lining and close the hose. We want to know just how the brakes will work from the engine.

Q. If there is a leak in the hose couplings, what should be done?

A. Turn angle cocks, break the coupling, and, if the seat is bad and there is no extra hose gasket, make the seats round, if they are not so, and recouple. If the leak still exists, break the coupling, put a small stick back of each lug, and close the couplings on them.

Q. Why should paper never be used to make a joint?

A. It works into strainers, often causing an auxiliary-reservoir to charge slowly, and it may prohibit getting quick-action on this car.

Q. When inspecting a train, if we find a brake that does not apply with the rest, what should be done?

A. See that the car is cut in properly, and try the drain cock to see that there is air in the auxiliary reservoir. If the auxiliary is charged, signal the engineer for a brake-pipe reduction.

Q. If the brake applies and then leaks off gradually,

Google

without any air coming out of the triple exhaust, what is probably the trouble?

A. The air is blowing by the packing leather in the brake cylinder.

Q. How can a brake that does not apply when the reduction is made sometimes be made to work?

A. By cutting it off from the car ahead and the one behind it and opening the angle cock. The cylinder may be dirty, and setting the brake in the emergency may loosen the dirt and cause it to work properly.

Q. If the auxiliary reservoir were found to contain no air when the drain cock was opened, what might be the trouble?

A. The feed grooves might be corroded shut in the triple; the strainer where the cross-over pipe joins the main brake-pipe, or the one where the cross-over pipe joins the triple, may be filled with dirt and scale.

Q. Is it good practice to pour oil into a hose to make a brake work?

A. Decidedly not; it may occasionally furnish temporary relief, but it will decay the rubber-seated valve in the triple and dampen the strainers, pipe, and triples so that dirt will adhere to them and render them sticky.

Q. Is a small leak, one that the pump will easily overcome, more easily managed in a long or a short train?

A. In a long train.

Q. Why?

A. Because there is a much larger volume of air in a long brake-pipe, and the reduction causing the brakes to leak on harder after being applied will be much slower on a long than on a short train. Frequently a leak that could not be gotten along with in a train of three or four cars, if cut in with twenty tight cars, would not be noticed.

Digitized by Google

Q. If a retainer were broken off and the pipe plugged, what would result?

A. After the engineer applied the brake, he could not release it, as the exhaust port would have been closed.

Q. Would it interfere with applying the brake?

A. No.

Q. If a brake sticks, what should be done?

A. Look to see that no retainer handle is up, that the hand brake is not set, and that no lever is caught. Then signal the engineer again to release. If he is unable to release it, cut the car out and bleed it.

Q. Should a car be bled when cut out?

A. Always; a leakage of brake-pipe pressure between the cut-out cock and the triple might cause the brake to apply after it was cut out, if any air were left in the auxiliary-reservoir.

Q. If the piston stays out on a car after we hear the air escape from the triple exhaust port, what is wrong?

A. The release spring is probably weak or broken.

Q. Is it necessary to cut such a brake out?

A. No; the jar of the wheels against the shoes will force the piston in.

Q. If two hose couplings are frozen together, how should they be separated?

A. The ice should be thawed, or the gaskets will be torn.

Q. If a triple fails to work because it is frozen, what should be done?

A. It should be thawed and the drain plug removed in the bottom of the triple, to remove the water and avoid a repetition of the trouble.

Q. What three things would cause the brakes to go

Google

into emergency when making a gradual brake-pipe reduction?

A. A weak graduating spring, a broken graduating pin, and, by far the most likely, a sticky triple.

Q. How would we find the triple causing the trouble?

A. On a train of five or six cars we can watch to see which brake grabs first and cut the car out. On a train of over seven cars, the brakes do not usually apply with the first reduction on the car causing the trouble, so, to find the faulty triple, have the engineer make a five-pound brake-pipe reduction, find the car with the brake not set and cut it out. Then try again with all cut in to be sure that the faulty triple has been found.

Q. How would we find the faulty triple if the brakes went into quick action with the first reduction on a long train?

A. Turn an angle cock in the middle of the train and see which half contains the trouble; continue in this manner until the trouble is located in a five car lot; have the brakes applied and watch these five as already described, cut out the defective brake.

Q. If the emergency has been used, or we find a car cut out, and, when we cut it in, a strong heavy blow issues from the triple exhaust and at the same time the brake sets on the car and cannot be released, what is the trouble?

A. The emergency piston is stuck down, holding the emergency valve from its seat.

Q. How can we close it?

A. Tap the triple lightly. If this does not work, turn the cut-out cock in cross-over pipe until the blow stops and then cut it in suddenly; the sudden flow of air may close the valve.

Digitized by Google

Q. In trying the brakes on a passenger train, how should the signal be given?

A. From the head car to apply them and from the rear car to release them, to be sure that the whistle-line cocks stand right throughout the train. On an excursion train the signal should be tested from every car in the train.

Q. Explain a means by which poor brakes can be detected.

A. By feeling of the wheels at the foot of a grade.

Q. What will characterize the wheels on the cars having the poor brakes?

A. They will be cold, or cooler at least, than the others.

Q. What is this test called?

A. The thermal test.

Q. Would we expect to find the same degree of heat in all the wheels?

A. No; the heavier cars will have the greater braking power as compared with the lighter ones, and these cars would naturally have warmer wheels. This test, nevertheless, is a very valuable aid in detecting poor brakes.

Q. How would you account for it if a test was made at the top of a grade and all the brakes applied, but some of the wheels were found to be cold when making the thermal test at the foot of the grade?

A. One of four chief causes is generally responsible for this condition—low braking power, poor packing leathers, poor retainers, or triple feed grooves in a dirty condition.

Q. What could dirty feed grooves have to do with the cool wheels if the auxiliary reservoirs charged all right and the brakes applied properly at the top of the grade?

A. In the usual yard test air enough will leak by the

Digitized by Google

triple-piston packing ring and charge the auxiliary reservoir so that the brakes will apply properly even if the feed groove is dirty. In descending a heavy grade there are but a few seconds in which to recharge between brake applications; as a result the reservoirs on the cars are never recharged after the first application that is made on the grade, and the brakes on these cars are, as developed by the thermal test, practically useless, although they did pass the first test.

TRAIN HANDLING.

Q. What should we always do before coupling to a train?

A. Start the pump and be sure that everything is working properly. Do not wait to discover pump or engineer's valve defects when your train is in and ready to proceed.

Q. How should an engineer handle the brake on his engine in coupling to a train?

A. In backing onto a train, especially an empty one, he should make two or three applications of his driver and tender brakes, and leave his valve on lap when coupling to the train.

Q. Why is this done?

A. To couple to the train with reduced auxiliary pressures.

When the cocks between the engine and tender are turned, in coupling a train to an engine, the brakes are usually applied on the engine and tender on account of the reduction caused by the air flowing back into the train. If the brake-pipe is long and empty, the main-reservoir pressure might flow back and equalize with that in the brake-pipe at so low a pressure that it might not be able to overcome the tank and driver auxiliary pressures so as to force these triples to re-

Digitized by Google

lease position. In this case the two brakes would be stuck, and if more cars were to be picked up, we would have to wait to pump up, or get down and bleed these two brakes off. If we had backed onto the train with reduced auxiliary-reservoir pressures on the engine and tender, we would not have met with this trouble, as the main-reservoir pressure could then have raised that in the brake-pipe sufficiently to have released the brakes.

Q. What should be done after getting our cars placed in the train?

A. We should wait until everything is fully charged.

Q. How can we tell when the train is charged?

A. The pump will nearly stop; or place the valve on lap, and if everything is charged the black hand will not fall.

Q. What should then be done?

A. A thorough test of piston travel, leaks, and retaining valves should be made before attempting to handle the train on grades.

Q. How much reduction should be made?

A. A gradual twenty-pound reduction.

Q. Why is it necessary to make a test?

A. A part of the pistons may be traveling against the cylinder heads, the travel may be too short, the retainers may not be good, or there may be something wrong with a triple that would throw the whole train into emergency when the service application was desired, in which case freight might be shifted or broken, especially in a train partly equipped with air brakes.

Q. In testing brakes, from what point should they always be applied and released?

A. From the engine.

Q. How could it happen that a brakeman could turn

Digitized by Google

an angle cock at the rear of the train and apply the brakes, and an engineer could release them, but that the engineer could not set them from the engine?

A. The lining of a hose might be loose, so that the engineer could throw air back into the train to release the brakes, but when a reduction was made, the air flowing in the opposite direction might roll the lining up and close the hose.

Q. Is this a common occurrence?

A. No, but it is by no means unheard of.

Q. What else should always be tested?

A. The brake-pipe, to see if it leaks, and how much.

Q. How should this be done?

A. By making a seven-pound reduction in service position and then placing the valve on lap. Watch the black hand, and the fall of it will show the leak in the brake-pipe.

Q. Will not a leak in the brake pipe show if the valve is simply lapped without first applying the brakes?

A. It will in time, but not nearly so quickly as by the other way.

Q. Why not?

A. If the valve is simply lapped, the brakes are not applied, the triples are in release position, and the feed grooves connect the auxiliary-reservoirs and brake-pipe. If there is a leak in the brake-pipe with the triples in release position, the air from the auxiliary-reservoirs will leak through the triple feed grooves back into the brake-pipe, and not only the brake-pipe but the auxiliary-reservoir pressures will have to be reduced before the black hand on the gauge will register the leak.

Q. Why is the other way quicker?

A. If the brakes are first applied and the valve then placed

Digitized by Google

on lap, the feed grooves in the triples between the auxiliary-reservoirs and brake-pipe have been closed and the leak simply has to reduce the brake-pipe pressure when the black hand will register the leak. With a large volume of air a given leak will reduce the pressure much more slowly than the same leak drawing air from a smaller volume.

Q. Just as soon as a train tips over the summit of a hill, what should be done?

A. A reduction of brake-pipe pressure should be made to be sure that no angle cocks have been turned and that the brakes take hold properly, also to get the use of the retainers as soon as possible.

Q. How can we tell if the angle cocks back of the tank are properly turned?

A. By the sound of the brake-pipe exhaust. The more cars of air the greater the volume of air in the brake-pipe, and the longer the equalizing piston will have to stay up to make a given reduction.

Q. What should be done if the brakes do not hold properly, or we know by the brake-pipe exhaust that an angle cock has been closed?

A. Blow brakes before the train gets to moving fast.

Q. How much reduction should be made for the first?

A. Not less than five pounds, unless K triples are in use, and after we get over fifteen cars it is better to make a seven-pound reduction. Five pounds using K triple valves will apply all brakes on trains unless of exceptional length.

Q. In a part air train, what would be the harm in starting with a ten-pound reduction?

A. The brakes setting hard on the air-brake cars would cause the slack on the non-air cars to run up hard, causing a jar that would be likely to damage the car or the contents, to say nothing of the effect on the crew in the caboose.

Digitized by Google

Q. Why is a light reduction, when not using K type of triples, liable not to set the brakes, especially on a long train?

A. Because, with a large volume of brake-pipe pressure, reductions are made so slowly that there is a tendency for auxiliary-reservoir pressure to feed through the triple feed grooves into and equalize with that in the brake-pipe, in which case the triple pistons would not move; or, if they did, the air going from the auxiliary-reservoir into the brake cylinder very slowly would blow through the leakage grooves past the pistons and out to the atmosphere.

Q. How much should be made for the second reduction?

A. This is governed largely by circumstances, but the best results with long trains will be gotten if no very light reductions are made. If the reduction is being made on a long train and the packing rings of some of the triples are a little loose, there is a tendency on the part of the auxiliary-reservoir pressure, that should go to the brake cylinders, to leak back into the brake-pipe by the packing ring.

Q. We continue our brake-pipe reductions until finally our brakes are fully set, that is, all the auxiliary reservoir and brake-cylinder pressures have equalized. How much reduction is usually necessary to accomplish this, if the piston travel is not over 8 inches?

A. About twenty pounds, if it is made with one reduction; but in handling a train on a grade, if we needed to get all we could, it would be permissible to make a twenty-five-pound reduction. With K triples 17 and 22 pounds reductions are sufficient.

Q. Give the reason for this last statement.

A. In descending a grade, we may have gone one, two, or three miles, while we have been making a twenty-

Digitized by Google

pound reduction. Naturally, some of the air put into the brake cylinders has escaped by the packing leathers to the atmosphere in going this distance, and making another brake-pipe reduction will let more auxiliary-reservoir pressure to the cylinders. Where the twenty-pound reduction was made with one reduction, the air had no time to leak away by the cylinder packing leathers.

Q. Suppose we had already made a twenty-five-pound reduction and the packing leathers in the brake cylinders were practically tight, if we continued taking air from the brake pipe, would the brakes be set any harder?

A. No.

Q. Would we lose any braking power?

A. Yes.

Q. How would we lose braking power?

A. The brake is already fully set, that is, the auxiliary-reservoir and brake-cylinder pressures are equal; with a further reduction of brake-pipe pressure, no more auxiliary-reservoir pressure can go to the cylinder; but just as soon as the auxiliary-reservoir pressure is enough greater than that in the brake-pipe to overcome the resistance of the graduating spring in the triple, the triple piston will be forced to emergency position, and we will have a direct connection between the auxiliary-reservoir and brake cylinder through the emergency port in the end of the slide valve. The brake-pipe pressure being less than that in the auxiliary-reservoir and cylinder, both these pressures will begin leaking by the packing ring of the triple piston into the brake-pipe.

Q. Is there any other way in which we would lose braking power by too heavy a brake-pipe reduction?

A. Yes; the brake-pipe check in the emergency part of the Westinghouse triple is seldom air-tight, owing to corrosion. When the brake-pipe pressure is less than that in

Digitized by Google

the brake cylinder, the brake-cylinder pressure forces the rubber-seated valve from its seat and leaks by the brake-pipe check into the brake-pipe.

Q. Is there usually any warning to let the engineer know he has made too heavy a reduction?

A. Yes; especially on a long train, where there are more packing rings to leak.

Q. What is it?

A. Under these circumstances, a blow at the exhaust at the brake valve results.

Q. What causes this exhaust?

A. The engineer reduced the equalizing-reservoir pressure in order to cause the equalizing piston to reduce the brake-pipe pressure. It closed the exhaust when the brake-pipe was a trifle less than the equalizing-reservoir pressure. When too heavy a brake-pipe reduction had been made, we saw that the auxiliary-reservoir and brake-cylinder pressures fed back into the brake-pipe. The brake-pipe now being greater than the equalizing-reservoir pressure, the equalizing piston is moved from its seat, and the blow at the brake-pipe exhaust continues as long as air is feeding into the brake-pipe from the auxiliary-reservoirs and brake cylinders.

Q. Does the equalizing piston always move and give this warning?

A. No; if there is leakage by the equalizing piston, the air feeds by and equalizes the equalizing-reservoir and brake-pipe pressures, but the braking power is lost just the same.

Q. Is the triple piston supposed to form a joint on the leather gasket between the triple head and the main body of the triple?

A. Yes, when the gasket is new, but the gasket dries out so that the surface is not smooth.

Digitized by Google

Q. What places should we pick out, if possible, in which to recharge?

A. Where the grade lets up a little and on curves where a train binds.

Q. To release brakes, where should the handle of the engineer's valve be placed?

A. In full release position.

Q. How long should it be left here?

A. This is governed entirely by the length of the train. If, in descending a grade, both hands on the gage shows that the brake-pipe and main-reservoir pressures equalize below seventy pounds, the valve should be left in this position until both hands start to go above seventy. If the pressures equalize about seventy pounds when the valve is thrown to full release and stay there, the valve should be moved to running position as soon as the brakes are released, so as not to overcharge the auxiliary-reservoirs.

Q. Why, on a long train, should the valve be left in full release position until both hands start above seventy pounds?

A. A large port connects the main reservoir and brake-pipe in this position and a small one in running position, and we get the benefit of the excess pressure from the main reservoir in recharging; the pump works faster, and we can charge the train much more quickly, because the brake-pipe pressure being higher forces air into the auxiliaries faster.

Brakes are likely to stick and wheels slide, especially on a long train, if we try to release brakes in running position.

Q. Why does the pump work faster?

A. Because there is less main-reservoir pressure for it to work against.

Q. Why do the last three or four pounds feed more

Digitized by Google

slowly into the brake pipe, if the valve is put in running position?

A. Because when, in running position, the brake-pipe pressure is almost up to that at which the feed valve is adjusted, the spring in the feed valve begins to be compressed and allow the little regulating valve to partly close, in which case the pump will compress air faster than it can get through the feed valve. When the main reservoir is charged to ninety pounds, the pump practically stops, and this is likely to happen before the auxiliary-reservoirs are fully recharged.

Q. Why will some brakes stick in trying to release them in running position?

A. Because the brake-pipe pressure rising slowly may feed by some triple piston-packing rings, and allow auxiliary-reservoir pressure to keep equal with that in the brake-pipe.

Q. Why may the wheels slide in this case?

A. Because the brake on this car has been left fully set and the auxiliary-reservoir fully recharged. A five-pound reduction will probably set this brake in full with a pressure of sixty-five pounds, and this is more than is safe, especially with a light car. If a brake once sticks it is very likely to remain stuck, as the auxiliary-reservoir and brake-cylinder pressures equalize so high that it requires a higher brake-pipe pressure to release this brake, and the brake-pipe pressure increasing slowly, gives the air a better chance to leak by the triple-piston packing ring. A brake acting this way may be all right if handled properly.

Q. In descending a grade after getting the use of the retainer and having everything recharged, why is a five-pound reduction much more effectual than a five-pound reduction made without the use of the retainer?

A. Because in one case we are putting five pounds from the auxiliary reservoir into fifteen pounds in the cylinder,

Digitized by Google

and in the other we are putting five pounds from the auxiliary reservoir into an empty cylinder, and a part of that put in blows through the leakage groove before the piston travels far enough to close it.

Q. If a twenty-pound brake-pipe reduction will apply a brake in full without the use of the retainer, how much reduction ought to set brakes in full after getting its use?

A. Not over fifteen pounds.

Q. If all retainers are being used, is it necessary after charging up to make a five or seven pound for our first reduction?

A. Yes, with old equipment, some of the retainers might have been out of order, so as not to hold any air in the cylinder, and less than a five-pound reduction would not catch these brakes again.

Q. What should an engineer do, if, when he is not using the brakes, he feels them applying so as perceptibly to diminish the speed of the train?

A. He should place the handle of the engineer's valve on lap.

Q. Why?

A. Probably a hose has burst, or the conductor is using the conductor's valve. If the valve is not lapped, the main-reservoir pressure will be lost, and there will be no pressure with which to release the brakes and recharge the auxiliaries.

Q. Which is less dangerous, a leak that will gradually slow a train up, or one that will simply keep the train running steadily?

A. A leak that will slow a train up is much to be preferred.

Q. Why?

A. If the leak simply runs the train steadily and the engineer allows the pressure to gradually leak away because he seems to be making a nice, even run, he would have a dif-

Digitized by Google

ficult time stopping the train if necessity demanded it, after the pressure had leaked down to fifty pounds.

Q. Should an engineer try to make as uniform a run with air as can be done with hand brakes?

A. As a rule, no, although on some light grades a few retainers will run them smoothly. On heavy grades and long trains it is necessary to slow up to recharge. It will be found that a much more uniform run can be made with *K* triple valves, as lighter reductions result in a more positive response and a higher cylinder pressure is developed for a given reduction, hence it will not take so long to recharge, and the speed can be maintained more uniform.

Q. What should always be done, where possible, in making brake-pipe reductions?

A. Watch the gage.

Q. How do you account for the fact that sometimes, after a seven-pound reduction of equalizing reservoir pressure is made and the valve lapped, the gage records only a five-pound reduction when the brake-pipe exhaust closes?

A. The equalizing piston has allowed brake-pipe pressure to feed by it into the equalizing reservoir.

Q. Is this more likely to happen on a long or a short train?

A. On a long train.

Q. Why?

A. As there is a greater volume of air in the brake pipe of a long train, it takes longer to reduce the pressure, and the brake-pipe pressure has a longer time to leak in the manner described.

Q. If a quick reduction is made in emergency with the engine alone, and the valve is then placed on lap, why is

the tank or driver brake likely to kick off, although they would stay set in service application?

A. In emergency position, air is drawn directly from the brake pipe without taking any from the equalizing reservoir. When the valve is placed on lap, the equalizing-reservoir pressure leaks by the packing ring of the equalizing piston, raises the brake-pipe pressure, and kicks off one or both brakes.

Q. Why will this happen on an engine and not on a train?

A. The volume of air in the brake pipe of an engine alone is very small, and a slight leak into it is sufficient to raise the brake-pipe pressure and release the brake. With a train, the brake-pipe volume is so large that the leakage into it from the equalizing reservoir is not sufficient to affect the triples.

Q. The release of the brakes on the engine alone, after the use of the emergency, is ascribed by some to the surge of air. Is this the cause?

A. No; a surge of air would release the brake almost instantly. The brake does not release sometimes until five or ten seconds have passed.

Q. Why will this happen on one engine and not on another?

A. This simply means that on one the triple piston-packing rings are looser than that in the equalizing piston, and the brake-pipe pressure feeds by the triple piston and equalizes with that in the auxiliaries. A variation in the fit of the equalizing-piston packing rings on the different engines would also account for this.

Q. The above usually happens when stopping an engine at a water-crane or on a turntable. How are these stops best made with the air?

A. One application is best to use with an engine alone.

Digitized by Google

If we find that we are stopping three or four feet short, open the throttle, and the engine can be helped along a short distance and a smoother stop be made.

Q. What happens every time you use the emergency on a turntable?

A. You strike the table a blow which is the result of the weight and the speed of the engine, and then, if the turntable breaks down, wonder why the company does not provide a decent table.

Q. In making a water-tank stop with a passenger train, how should it be done to avoid a jar to the train and passengers?

A. The stop should be made with two applications of the brake, when using the old equipment, unless the grade is too steep and the pressure too low for safety. With the graduated release triple the brake is set with a high pressure, and this pressure is graduated off as the stop is approached. It may be necessary to make another reduction; if so, the response is quick as the shoes are already against the wheels, there is pressure in the cylinder and the L triple contains the quick-service feature.

Q. How do we handle the valve to make the first release so that the brakes will respond with the first reduction when using old equipment?

A. When the speed of the train has been reduced to that desired, throw the valve handle to full release and bring it back on lap immediately.

Q. Why bring it back on lap?

A. So as not to raise the brake-pipe pressure too high. The feed grooves in the triples are small, and have only three or four seconds in which to equalize the brake-pipe and auxiliary-reservoir pressures. If the valve is left in full release or running position, and the brake-pipe pressure gets

Digitized by Google

to seventy pounds, and there is, say, only fifty-five pounds in the auxiliary reservoirs, the triple pistons will not move to service position until over a fifteen-pound reduction of brake-pipe pressure has been made. By the time we have made this amount of reduction in service position we shall have gone by the water-crane, unless we use the emergency, and that is what is usually done if the engineer is not up to date.

Q. When should brakes be released on a passenger train?

A. Just before the train stops.

Q. What should be done on a grade just heavy enough so that the train will start with the brakes released or with a train of more than ten cars.

A. Stop the same as at a water-crane. No jar will be felt with a light application. With the L triple valve the pressure may be graduated down to that just sufficient to cause the train to remain at rest.

Q. How about a heavy grade?

A. Our stop, if we do not have the graduated release feature, will then depend on the grade and our pressure. Safety should be of first importance, even if the stop is a trifle rough.

Q. What makes the jar, if the brakes are not released before the train stops?

A. With the brakes set hard, the trucks are distorted, and it is the struggle of the trucks to right themselves that causes the jar.

Q. Can brakes be started releasing longer before stopping after a light or a heavy reduction?

A. After a heavy reduction, as there is more air in the cylinders to be gotten rid of, and the brakes release more slowly.

Digitized by Google

Q. What is meant by an application?

A. It covers all the time from the moment the brake is applied until it is released; three or four reductions may be made during one application.

Q. In making a stop with a freight train, when should brakes be released?

A. After the train comes to a full stop, to avoid breaking the train in two if the slack runs out hard in releasing before stopping.

Q. If we have stopped short with a freight train, and need to release before stopping to pull up farther, what should be done?

A. We should wait for the slack to adjust itself in the train before using steam. Even then the steam should be used very cautiously.

Q. In running passenger trains over cross-overs to get around freights, what care should be taken?

A. To do this, brakes have to be used when flagged, at the upper cross-over, lower cross-over, and usually at a station. We should charge up as much as possible after each application. Do not follow the plan of releasing and putting the valve on lap in such a case to be sure the triples will respond quickly. They will respond quickly, but if the station stop is on a grade, you may not have air enough left to make it when you get there.

Q. What is the usual cause of trains running away?

A. Making a great many reductions without occasionally charging up; or allowing the pressure to leak away, because the train is running steady, and then when we get ready to recharge, not having enough air left to slow up the train; by not stopping to recharge when air is gradually being lost and by maintaining too high a speed when the brakes are not holding well.

Digitized by Google

Q. On a fast passenger run. how may time be saved in using the brake?

A. By waiting longer before applying the brakes and then making a ten-pound reduction at the start.

Q. Will this not jar the passengers?

A. Not when going fast. Passenger trains are continuous, and there is very little slack to run up. A ten-pound reduction made with a train moving ten miles an hour would produce a very unpleasant sensation to passengers, where at forty miles an hour it would not be noticed. This is explained under the subject OLD-STYLE HIGH-SPEED BRAKE.

Q. Should brakes be tested in taking on cars?

A. Yes, to be sure that the brakes on these cars work properly, and that the brakes back of them can be applied and released through them.

Q. When all retainers on a train are not necessary, how should they be used?

A. At the head end if the grade is short; otherwise change them around and use them on every other car, so as not to overheat any wheels.

Q. If the brakes are applied and the engineer wishes to release and drift two or three hundred feet before stopping, what should be done?

A. Enough retainers should be left in operation to keep the slack bunched. This, of course, is not usually necessary, if the engine is equipped with an independent brake.

Q. When should hand brakes be used?

A. On the rear of a part air train when backing it into a siding; if it stands on a knoll. to keep the slack from running back; to aid the air when the brakes are not holding well.

Q. Should hand brakes and air brakes be used together on the same car?

Digitized by Google

A. This is a risky practice. If the two brakes work together, we are very likely to heat or slide wheels; if they work in opposition, there is danger of a brakeman being thrown from the car; and the hand brake being applied will take up the slack in the brake rigging, so that the piston cannot get by the leakage groove.

Q. If hand brakes be used back of the air, if there are not enough air brakes to control the train, what is likely to happen?

A. This is likely to produce a bad effect when the air brakes are released. If the retainers are poor and allow the slack to run out, the train may be broken in two.

Q. If hand brakes are to be used with the air, where should they be applied?

A. Next to the air.

Q. Should driver brakes be cut in when descending a heavy grade?

A. Always, or so much more work is thrown on the car brakes. The use of a water brake would, of course, be an exception to this rule.

Q. If cut in all the time on heavy grades, would the tires not become overheated?

A. In heavy grade work the piping is usually so arranged that a cock can be closed between the triple valve and brake cylinder, or a pipe from the brake cylinder is run into the cab and a cock attached to same. In either case the proper manipulation of these valves will prevent overheating of tires.

Q. If an air-brake train should be stalled on a grade, should part of the train be left with air brakes to hold them until the engine comes back?

A. No; the air brakes should be released one at a time,

Google

and the hand brakes applied. If left with the air holding them, the air might leak off and allow the train to run away.

Q. When brakes are fully set, the long travel brakes are easier to release. They may be released and leave the short travel brakes applied. Is this good practice in holding trains?

A. No; it is very bad practice. A train may be broken in two in this way.

Q. If brakes stick and will not release by placing the valve in full release, what should be done?

A. Make a full service reduction and then, with a full excess pressure, throw to full release. If a release from the engine is possible, this will accomplish it.

Q. The practice is sometimes followed of using hand brakes on some of the air cars to take the place of the retaining valve. If this is done, how and when should the hand brakes be applied?

A. They should be applied so as to hold as nearly as possible what the retaining would accomplish when retaining the proper pressure. If the brakes work "together," and the hand brake is applied when a high cylinder pressure exists the wheels on cars where the hand brakes are used will be called upon to do too much work and undue heating will result. Do not use hand brakes in such a case if the brakes work "opposite."

Q. What harm is there in pulling hose apart instead of uncoupling them?

A. The couplings are likely to be sprung so that they cannot be coupled again, and the brake pipe is likely to be torn from the car or engine.

Q. Does it do any harm to lean on the rotary handle when the brakes are applied?

A. Yes; if the dovetail piece that fits into the rotary

Digitized by Google

tight on account of dirt and gum, the rotary may be cocked so as to allow main-reservoir pressure to feed into the brake pipe under the rotary and release some of the brakes.

Q. What is the trouble, when there is a leak in the brake pipe, if the engine is alone, but coupled to tight cars, the leak does not show?

A. The leak is in the angle cock at the rear of the tender. When coupled to a train, the leak is not noticed as the cock is open. With the engine alone the cock leaking allows air to pass out of the hose to the atmosphere.

Q. In double heading, which engine should handle the brakes?

A. The lead engine.

Q. What should the second engineer do?

A. Turn the cut-out cock under his valve and under no circumstance, unless in case of accident or when told to, should he cut in and interfere with the work of the lead engine.

Q. If the pusher engine has no cut-out cock, what should be done?

A. The valve should be placed on lap.

Q. In this case, why does the equalizing piston sometimes rise?

A. Because the lead engineer increases brake-pipe pressure to release the brakes, and the increased pressure forces the equalizing piston from its seat.

Q. How may it be seated?

A. By putting the handle in full release position long enough to charge the equalizing reservoir.

Q. In case of emergency, when it is necessary for us to leave the engine, what should be done?

A. Place the engineer's valve in emergency position and

Digitized by Google

leave it there. In our hurry, if we tried to lap the valve, we might get it into running position and release the brakes.

Q. Why ought we never to bring our valve back from emergency position too quickly?

A. There might be two or three cars cut out, a couple of plain triples, a contracted passage, or a couple of cars that would not go into quick-action on account of dirty strainers. If these cars were together, they would not help to carry the quick-action back. Generally a quick-action triple will not send a quick reduction through five cars which are cut out. In this case, if the engineer's valve had been lapped too quickly, the surge of air ahead from the rear end would release the head brakes, and all we would have would be a very light service reduction on the cars back of those cut out. If we leave the engineer's valve in emergency position long enough, we could at least get the full service application on these cars, and the emergency on those ahead of the cars cut out.

Q. Should the engine be reversed when the driver brakes are applied, if we wish to stop quickly?

A. No; the following test, made by Mr. Thomas, Assistant General Manager of the N., C. and St. L., clearly demonstrates that the air brake used alone is better than the brakes with the reverse lever, or than the reverse lever alone.

The result of these tests was published in the '95 *Air-Brake Proceedings,* and is given on pages 264 and 265.

The conditions of the test were as follows:

Driving brake power, seventy per cent.; tender, one hundred per cent.; N., C. & St. L. coaches, ninety per cent.; Pullman sleeper, forty to one hundred and one per cent.

Boyer speed recorder was used and tests were made: first, brakes applied; second, engine reversed; third, sand lever opened. Track was level, in best possible condition, and all circumstances favorable.

Digitized by Google

From the record of tests the following valuable information was derived:

First. Best stops are made with braking power not quite strong enough to skid wheels.

Second. Length of stop is the same in reversing the engine whether cylinder cocks are open or closed.

Third. The wheels did not lock rigidly when the engine was reversed without the brakes being used.

Fourth. The tests demonstrated that the brakes used alone are better than with the engine being reversed. The stop is quicker, and there are no flat spots obtained.

Fifth. Enough sand is much better than too much.

Sixth. Sand should be used before wheels start skidding, as its use will not start the wheels revolving when once skidding; it will simply increase the flat spots.

Seventh. Sand being used on a straight track, the drivers did not lock when the engine was reversed, but on a curve they would. On a curve the engine rocks, and sand is not so likely to strike the rail.

Eighth. In expected emergencies, the drivers did not lock when sand was used before brakes were applied and engine reversed, but it took so long to get the sand running first that, in the end, the stop was not made as quickly as with unexpected emergencies where the engine was not reversed.

Ninth. The unexpected emergencies are the ones that bear the most weight, as expected emergencies are practically unheard of.

The table on page 339 will be of interest, as it shows how old and new air-brake trains can be stopped when fitted with air-brake trains can be stopped when fitted with the old and new Westinghouse quick-action freight brake.

The train consisted of eighty Southern Pacific oil-tank cars.

Digitized by Google

COMPARISON OF THE NEW (TYPE K) WITH THE OLD (TYPE H) FREIGHT BRAKE EQUIPMENTS IN ORDINARY SERVICE OPERATION ON 80-CAR TRAIN.

Brake-pipe Reduction	Triple Valve Used	Approximate Lenght of Stop in ft. from speed of: 10 M. P. H.	20 M. P. H.	30 M. P. H.
5 lbs.	H	860	2,275	4,140
5 lbs.	K	330	875	1,700
10 lbs.	H	325	890	1,890
10 lbs.	K	215	595	1,090
15 lbs.	H	295	860	1,525
15 lbs.	K	220	580	1,040
20 lbs.	H	365	940	1,725
20 lbs.	K	215	580	1,060

Note: The above results were obtained during the Southern Pacific Brake Tests at Bassett, Cal., in July, 1908, with an 80-car train of empty oil-tank cars, having 10-inch freight equipment and an average standing piston travel of 6.78 inches; brake-pipe pressure 80 pounds. Road bed practically level.

The results are only comparative and must not be taken to cover all conditions. It will be noted that in some cases the stops are slightly longer for 20-pound reductions than for 10 or 15-pound. This is due to the fact that in some cases the train came to a stop before the reduction was completed.

PIPING.

Q. What should be done in preparing pipe for use?

A. After bending the pipe it should be blown out with steam to get rid of scale and dirt. If there is no steam at hand, air should be used. Under no consideration should pipe be used without first being cleaned. All fins should be carefully removed to prevent their working loose and clogging strainers.

Digitized by Google

TABLE.

No.	Brakes Used.	Condition of Train.	Speed.	Sand.	Total No. of Stops Made.	Maximum Length of Stops.	Minimum Length of Stops.	Average Stop in Feet.	Time in Secs.	Wheels Slid.	Flat Spots.
1	Driver and tender brakes.....	Engine and tender....	30	No.	9	280	240	254	11	No.	No.
2	Driver brake alone.....	" "	30	"	2	438	387	412	18	"	"
3	Tender " "	" "	30	"	7	604	458	538	23	"	"
4	No brakes, engine reversed.....	" "	30	"	3	464	426	450	20	Locked and revolved backwards.	"
5	Driver and tender brakes and engine reversed..... ..	" "	30	"	4	290	245	276	12	Yes.	2½ in.
6	No brakes and engine "plugged"	" "	30	"	2	540	505	522	25	Locked and revolved backwards.	No.
7	Driver and tender brakes.....	" "	30	Abundance	1	260	260	260	11	No.	"
8	No brakes and engine reversed..	" "	30	"	1	280	280	280	12	"	"
9	" " " " "plugged."	" "	30	"	1	265	265	265	11	"	"
10	Driver and tender brakes and engine reversed.....	" "	30	No fresh sand.	4	177	140	158	9	"	"
11	Driver and tender brakes, with engine "plugged."	" "	30	"	1	177	177	177	9	"	"
12	Driver and tender brakes	" "	20	No.	1	111	111	111	8	"	"
13	No brakes and engine reversed..	" "	20	"	1	161	161	161	9	"	"
14	Driver and tender brakes..	" "	20	Yes.	1	90	90	90	6	"	"
15	" " " "	" "	40	No.	1	532	532	532	25	"	"
16	No brakes, engine reversed.....	" "	40	"	2	861	820	840	32	Locked and revolved backwards.	"

TABLE.—Continued.

No.	Brakes Used.	Condition of Train.	Speed.	Sand.	Total No. of Stops Made.	Maximum Length of Stops.	Minimum Length of Stops.	Average Stop in Feet.	Time in Secs.	Wheels Slid.	Flat Spots.
17	Driver and tender brakes...	Engine and tender....	40	Yes.	1	475	475	475	20	No.	No.
18	All brakes cut in.....	Engine, tender and 5 N. C. & St. Louis coaches	30	No.	8	271	260	258	11	"	"
19	" " " "	Engine, tender and 5 N. C. & St. Louis coaches	30	Yes.	1	250	250	250	11	"	"
20	" " " " engine reversed.	Engine, tender and 5 N. C. & St. Louis coaches	30	"	7	335	"199	265	11	Yes.	3 in.
21	" " " "	Engine, tender and 5 N. C. & St. Louis coaches.....	40	No	4	500	400	474	19	No.	No.
22	" " " "	Engine, tender and 5 N. C. & St Louis coaches.....	40	Abundance	1	475	475	475	19	"	"
23	" " " " engine reversed.	Engine, tender and 5 N. C. & St. Louis coaches	40	Yes.	1	542	542	542	23	Yes.	4 in.
24	" " " "	Engine, tender, 5 N. C. & St. L. coaches and 4 Pullmans..	30	No.	1	327	327	327	14	No.	No.
25	" " " "	Engine, tender, 5 N. C & St. L. coaches and 4 Pullmans... ...	35	"	1	465	465	465	19	"	"
26	" " " "	Engine, tender, 5 N. C. & St. L. coaches and 4 Pullmans.....	40	"	2	575	575	575	25	"	"
27	" " " "	Engine, tender & 4 Pullman sleepers	30	"	1	367	367	367	14	"	"
28	" " " "	" " " " "	40	"	1	702	702	702	26	"	"
29	* " " " " engine reversed.	Engine, tender and 5 N. C. coaches	30	Yes.	9	375	218	350	13	Yes.	2¾ in.
30	† " " " " " "	Engine, tender and 5 N. C. coaches....	30	"	1	325	325	325	13	No.	No.
31	* " " " " " "	Engine, tender and 5 N. C. coaches.....	30	"	1	375	375	375	14	Yes.	3 in.
32	Pullman sleeper "kicked.".		30	No.	1	416	416	416	18	No.	No.
33	N. C. and St. L. coach "kicked."		30	"	1	202	202	202	10	"	"

* Unexpected Emergencies. † Expected Emergency.

Digitized by Google

Q. What should be done to the pipe while it is being blown out?

A. It should be tapped lightly to loosen the scale.

Q. What size pipe should be used in the different parts of the system?

A. The sizes given in the air-brake catalogs are correct and should be strictly adhered to.

Q. When using asphaltum or Japan varnish on pipe, how should it be applied?

A. Always on the outside of the thread to be screwed in, as in this way it will not get inside the pipe.

Q. In applying piping, what should be avoided?

A. No sags should be allowed in which water might collect; where practicable, gentle bends should be substituted for elbows, and very short bends should be avoided.

Q. Why are elbows or short bends undesirable?

A. The friction caused by them retards the flow of air when a sudden reduction is desired in emergency.

Q. Could pipe work be so crooked and elbows so numerous on an engine that a sufficiently quick reduction to cause emergency would not go through an engine?

A. Yes; this has been found so on engines, but the trouble was remedied when the number of elbows and bends was reduced.

Q. How should pipe work be secured?

A. By clamps that will hold the pipe rigidly in place so as not to allow the pipes to be moved, holes to be chafed in them, or any vibration to exist.

Q. After the pipe work is applied, what should be done?

A. It should be thoroughly tested under full pressure, and the leaks detected by the use of soapsuds.

Google

Q. After the pipe is tested, what should be done?

A. It should be painted with a rust-proof paint and one, if possible, that will not be affected by salt water dripping from refrigerator cars or by the acid in soft coal.

Q. Why is larger pipe used on freight than on passenger cars?

A. Because on a long freight train a sudden reduction will travel through the large pipe more quickly, as the larger the pipe the less the friction exerted to the passage of the air.

Q. Is there any other reason?

A. Yes; in emergency, with quick-action triples air from the brake pipe is put into the brake cylinder; a freight car being shorter than a passenger car, the larger pipe makes the volume of air in the brake pipe more nearly equal to that in the smaller pipe used on the longer passenger cars.

Digitized by Google

CHAPTER XII.

A FEW PRACTICAL FORMULÆ AND RULES FOR AIR-BRAKE INSPECTORS

(1) $\frac{\text{Braking power}}{\text{Cylinder value}} = \text{Total leverage.}$

(2) $\frac{\text{1-inch piston travel}}{\text{Total leverage}} = \text{Shoe movement for 1 inch of piston travel.}$

(3) $\frac{\text{Shoe wear}}{\text{Shoe movement for 1 inch of piston travel}} = \text{Total increase of piston travel to wear out a set of shoes.}$

Illustration of the Above Formulae.

Assume:

Weight of car=40,000 pounds; it is to be braked at eighty per cent of its weight; 10-inch cylinder used; shoes 1½ inches thick.

Eighty per cent of 40,000=32,000 pounds. The cylinder value, or push on the piston, of a 10-inch cylinder, when the brake is set in full service, is 4,000 pounds.

Substituting values in the equations:

$$(1) \quad \frac{32{,}000}{4{,}000} = 8$$

8 is the total leverage; that is, the push of 4,000 pounds

on the piston must be multiplied 8 times to give the proper braking power.

$$(2) \quad \frac{1''}{8} = .125'' \text{ or } \tfrac{1}{8}$$

⅛ of an inch is the distance that the brake shoes will move for each inch that the piston travels.

$$(3) \quad \frac{1\tfrac{1}{2}}{\tfrac{1}{8}} \text{ or } \frac{1.5}{.125} = 12$$

12 inches is the distance the piston travel would have to increase to wear out a set of shoes 1½ inches thick.

To find the area of piston:

Multiply the diameter of the piston by itself, and this product by the decimal .7854.

Example:

What is the area of an 8-inch piston?

$8'' \times 8 = 64$ sq. in.

64 sq. in. $\times$ .7854 = 50.26 sq. in.

50.26 square inches is the area of the piston; that is, the number of square inches in a circle 8 inches in diameter,

To find the volume or cubical contents of a cylinder:

Multiply the diameter of the cylinder by itself, this product by the decimal .7854, and this product by the length of the cylinder.

Example:

What is the volume of a cylinder 8 inches in diameter and one foot long?

$8'' \times 8 = 64$ sq. in.

64 sq. in. $\times$ .7854 = 50.26 sq. in.

50.26 sq. in. $\times$ 12 = 603.12 cu. in.

To find the pressure at which an auxiliary reservoir and brake cylinder will equalize with a full service application of the brake using an initial pressure of seventy pounds in the brake-pipe and auxiliary reservoir:

Digitized by Google

Multiply the capacity of the auxiliary reservoir in cubic inches by eighty-five pounds (seventy pounds brake-pipe pressure plus fifteen pounds atmospheric pressure, and divide the product by the combined capacity of the auxiliary reservoir and brake cylinder. The quotient will be, approximately, the pressure plus fifteen pounds atmospheric pressure. This is not absolutely correct, as it does not take into account the clearance in the cylinder back of the piston with the brake released. This usually corresponds to about 1 *inch of piston travel.*

Example:

Capacity of freight auxiliary reservoir = 1625 cu. in.

Capacity of 8-inch brake cylinder with 8-inch piston travel = 400 cu. in.

$$1625 \times 85 = 138{,}125. \quad 138{,}125 \div (1625 + 400) = 68$$

$$68 \text{ lbs.} - 15 = 53 \text{ lbs.}$$

Fifty-three pounds is the pressure obtained in the auxiliary and brake cylinder with the brake fully set in service.

The formulæ given below will be found convenient with which to find either the proper width of a lever to withstand a given strain, or to ascertain the fibre strain on a lever.

R = Fibre strain.

l = distance from point power is applied to center of pin at point for which dimension or amount of fibre strain is desired.

b = Thickness of lever.

d = Width of lever.

No allowance is made for the metal taken out of the lever for the pin holes, as the removal of metal has no practical weakening effect, same being so close to the central axis.

In general railroad air-brake practice, from 18,000 to 20,000 is considered a safe fibre strain.

Digitized by Google

$$R = \frac{6\ Pl}{b\ d^2}$$

$$d = \sqrt{\frac{6\ Pl}{R\ b}}$$

Example:

To find the fibre strain at the middle hole of a lever 24 inches between the push-rod and outside holes, middle hole 12 inches from push-rod hole, width of lever 4.336 inches at middle hole, lever 1 inch thick, 10-inch cylinder used, and a maximum pressure of 60 pounds obtained in the cylinder, giving a total power of about 4,700 pounds acting on the piston.

$$R = \frac{6\ Pl}{b\ d^2}\ R = \frac{6 \times 4700 \times 12}{1 \times 4.336 \times 4.336} \text{ or } R = 18{,}000 \text{ pounds.}$$

Example:

Under the same conditions as the preceding example find the proper width of the lever at the middle hole, permitting of a maximum fibre strain of 18,000 pounds.

$$d = \sqrt{\frac{6\ Pl}{R\ d}} \text{ or } d = \sqrt{\frac{6 \times 4700 \times 12}{18{,}000 \times 1}} \text{ or}$$

$$d = \sqrt{18.8} \text{ or } d = 4.336 \text{ inches.}$$

Width of lever should be 4.336 inches.

To reduce stops at different speeds to an equivalent stop at the same speeds, all other conditions being equal.

Rule: Multiply the known distance by the square of the speed for which proportionate distance is desired, and divide the product by the square of the speed at which known stop was made.

This rule is only practical with speeds which are not

Digitized by Google

more than three miles above or below the speed for which proportionate stop is to be calculated.

Example:

If a stop at 58 miles per hour is made in 1,600 feet, and one at 62 miles per hour in 1,800 feet, in what distance would each of these stops have been made at a speed of 60 miles per hour?

Square of 58 miles = 3364
Square of 62 miles = 3844
Square of 60 miles = 3600

$$\frac{1600 \times 3600}{3364} = 1712$$

$$\frac{1800 \times 3600}{3844} = 1691$$

In the first case the stop at 60 miles per hour would have been made in 1,712 feet, while in the latter in would have taken 1,691 feet.

Digitized by Google

Digitized by Google

CHAPTER XIII.

THE "PC" PASSENGER BRAKE EQUIPMENT

Q. What does the designation "PC" signify?

A. The Westinghouse Improved Brake Equipment Schedule "PC," which uses a Control Valve in place of a triple valve. "P" signifies *passenger*, and "C" stands for *control valve*.

Q. Where is it used?

A. On heavy passenger equipment cars, weighing from 125,000 to 150,000 or more pounds.

Q. Why is it necessary?

A. The braking force required to control such heavy cars as effectively as the old equipments on lighter cars became so great as to exceed the capacity of the largest practicable single brake cylinder combined with the highest practicable leverage.

Q. Was increased weight the only reason for bringing out the new equipment?

A. No. Increased schedule speeds in the service for which these heavy cars are usually required; the necessity of economizing time in making stops so as to meet the fast schedules; much longer trains with very large volume of air to be handled; these have all imposed conditions which the older type of equipment cannot satisfactorily meet.

Q. Does the "PC" equipment have all the features of the older passenger types?

A. Yes, and several novel features as well.

Q. What novel features are included as compared with the old high-speed brake (Schedule PM)?

Digitized by Google

A. 1. *Graduated release* and *quick recharge*, same as obtained with the LN equipment.

2. *Certainty and uniformity of service action.*

3. *Quick rise in brake-cylinder pressure.*

4. *Uniformity and maintenance of service brake-cylinder pressure* in spite of unequal piston travel or brake-cylinder leakage.

5. *Fixed limit in service braking power.*

6. *Full emergency braking power obtainable at any time* regardless of any service applications just previously made.

7. *Full emergency application automatically made* whenever brake-pipe pressure falls to a certain point.

8. The *service and emergency features are separated* to eliminate undesired quick action as much as possible.

9. A *low total-leverage ratio*, to increase the efficiency of transmitting the braking force from cylinder to brake shoes.

10. *Not sensitive to slight fluctuations of brake-pipe pressure* preventing brakes from "creeping on" or causing undesired light applications.

11. *Quick rise in brake-pipe pressure during release*, to make certain that all brakes will release when desired.

12. *Greatly increased sensitiveness to release*, to prevent "stuck" brakes.

13. *Graduated release may be eliminated* and changed to direct release like the old equipments whenever desired without any change in the mechanism.

Q. With all these new features, how does this equipment operate when mixed with old equipments in the same train?

A. When the brake valve is properly handled, it works in perfect harmony with the old equipments, and even improves the operation of the latter.

Digitized by Google

Q. Name the parts of the "PC" equipment (Figs. 118 and 119), and their duties.

A. 1. *Control valve* with its *compartment reservoir*, which corresponds in a general way to the triple valve of the old passenger brake equipments, and more closely to the distributing valve of the "ET" Locomotive Brake.

2. *Two brake cylinders*, one called the *service* cylinder and the other the *emergency* cylinder. The service cylinder alone operates in service applications, and both cylinders operate in emergency.

3. *Two storage reservoirs*, called the *service* and *emergency* reservoirs according to the brake cylinders with which they operate.

4. A *centrifugal dirt collector* placed in the branch-pipe from brake pipe to control valve near the latter to prevent scale, sand and dirt from reaching the control valve.

5. A *branch-pipe air strainer* screwed into the branch-pipe connection of the control valve to take the place of the small wire strainer used in the quick action triple valves. (See No. 16, Fig. 5.)

6. A *conductor's valve*, same as used with all passenger brake equipments, placed inside the car and connected to the brake pipe so that the brakes may be applied by the conductor in case of necessity.

7. Various other details usually required in passenger brake equipments such as *cut-out cocks*, *angle cocks*, *hose and couplings*, *dummy couplings*, etc.

8. Although not a fundamental part of the equipment, the *automatic slack adjuster* (see page 94) is usually applied to insure uniform piston travel.

Q. How are the graduated-release and quick-recharge features obtained?

A. By the air stored in the emergency reservoir.

Q. How is greater certainty and uniformity in service action obtained?

Digitized by Google

A. Slight brake pipe reductions cause the moving parts of the control valve to close the feed grooves without going to service position; after that, a necessary and proper reduction must be made before the brakes will apply.

Q. How is the quick rise in brake-cylinder pressure obtained?

A. As soon as the control valve parts start toward service position, they move very promptly, and open large, direct and unrestricted passages from reservoirs to brake cylinders.

Q. How is service brake-cylinder pressure maintained during a stop?

A. In the same way as on locomotives, by the application portion of the distributing valve. (See page 228.)

Q. How is the service braking power limited to a certain amount?

A. The volumes of the *pressure chamber* and *application chamber* of the control valve are fixed, and when their pressures become equalized, no higher service brake-cylinder pressure can be obtained.

Q. What is the maximum brake-cylinder pressure in service with 110 pounds brake-pipe pressure?

A. Eighty-six pounds.

Q. What brake-pipe reduction will give this?

A. Twenty-four pounds, the same as with the high speed brake.

Q. How does this pressure of equalization in service compare with older equipments?

A. It is much higher, the older equipments being designed to equalize at 50 pounds from 70-pound brake pipe, and being limited to 60 pounds by the high-speed reducing valve, or safety valve, when 110-pound brake pipe is used.

Q. How is the "full emergency at any time" feature obtained?

A. Since the service and emergency parts of the control

valve are entirely separate, and the operation of the quick-action portion depends only on the movement of its parts to emergency position (which always occurs when an emergency reduction of brake-pipe pressure is made) it follows that an emergency application can always be effected regardless of what applications may have previously occurred.

Q. What is the purpose of the feature giving an automatic emergency application on depletion of brake-pipe pressure?

A. It is a positive assurance against total loss of braking power due to pumps stopping, leakage, waste of air, or any other cause, because whenever brake-pipe pressure becomes reduced to a certain point, the quick-action portion of the control valve opens up the brake pipe to the atmosphere, thereby causing an emergency application by means of the air remaining in the service and emergency reservoirs.

Q. Can this kind of an emergency application be obtained in handling the brake valve without going to emergency position?

A. Yes, if the engineer keeps on reducing brake-pipe pressure below full service reduction with the brake-valve handle in service position, he will eventually reach the point where the control valves will automatically apply in emergency.

Q. Is this good practice?

A. No, it is very bad practice, and any engineer causing such an application shows that he does not understand how to properly handle the brake valve.

Q. What is this feature of the "PC" equipment often called?

A. The "*over reduction*" feature.

Q. Besides obtaining emergency at any time, what else is effected by separating the service and emergency features?

Digitized by Google

A. It permits of the necessary flexibility in service operation without in any way impairing the emergency features.

Q. Why is a low total-leverage ratio possible with this equipment?

A. The use of two brake cylinders per car, combined with the high-service equalization pressure of 86 pounds, since for the same service braking power it is not necessary to multiply the higher cylinder pressure so many times.

Q. How is the control valve made less sensitive to small brake-pipe fluctuations than the triple valves?

A. A small drop in brake-pipe pressure will close the feed groove without causing any application, so that unless the brake-pipe pressure becomes reduced to the point where an application ought to occur, there will be no ill effects from the small reduction.

Q. How does this equipment cause a rapid rise in brake-pipe pressure during a release of the brakes?

A. Very little air is taken from the brake pipe to recharge until the pressure chamber of the control valve is charged to within *five* pounds of normal brake-pipe pressure; consequently nearly all the air flowing into the brake pipe from the main reservoirs through the brake valve is utilized in raising the pressure in the small brake-pipe volume. As a result, brake-pipe pressure will rise as rapidly as the air can flow through the length of the train, without having to also recharge auxiliary reservoirs.

Q. How is increased sensitiveness to release obtained?

A. The control valve is so designed as to require a considerable differential to cause it to go to service position, while on the other hand a very small differential will cause the parts to move back to release position. Consequently in long trains where the rate of rise in brake-pipe pressure is likely to be slow, especially at the rear end, the control valve will release the brakes more readily than any triple valve.

Digitized by Google

Q. Why is it considered desirable to introduce a feature to transform the graduated release to direct release?

A. During the transition period, when cars are being equipped with this new brake, and they will for some time have to operate in trains with other cars having the older type of brake without the graduated release feature, it is considered best to use only the direct release on all cars until such time as they are all equipped with the graduated-release brake.

THE NO. 3-E CONTROL VALVE.

Q. What are the principal parts of the control valve?

A. 1. Equalizing portion.
2. Application portion.
3. Emergency portion.
4. Quick-action portion.

Q. Referring to Figs. 120, 121, and 122, how are these parts assembled?

A. The application portion projects into the inside of the compartment reservoir from the front end, and the equalizing portion bolts onto the front end right on the application portion. The emergency and quick-action portions protrude up into the reservoir from the bottom, one on either side, the quick-action portion on the left and the emergency portion on the right.

Q. How many chambers are there in the compartment reservoir, and what are they called?

A. Three: the *pressure chamber*, *application chamber*, and the *reduction-limiting chamber*.

Q. What are the duties of the equalizing portion?

A. It corresponds in a general way to the equalizing portion of the distributing valve (page 228) or the old plain triple valve (page 21). It is directly affected by changes in brake-pipe pressure and controls, either directly or in-

directly, the charging of the reservoirs, the application of the brake in either service or emergency, and the release of the brake.

Q. What are the duties of the application portion?

A. It controls the flow of air from the service reservoir to the service cylinder, and the release of this cylinder. It has nothing to do with the emergency reservoir or emergency brake cylinder.

Q. What is the emergency portion for?

A. It contains a double piston and slide valve, which controls the flow of air from the emergency reservoir to the emergency brake cylinder, and the release of that cylinder to the atmosphere.

Q. What are the duties of the quick-action portion?

A. It corresponds in a general way to the quick-action portion of a triple valve. It operates only in emergency applications, venting brake pipe air to the atmosphere (instead of to the brake cylinder), and closing the vent as soon as the desired brake-pipe reduction is made.

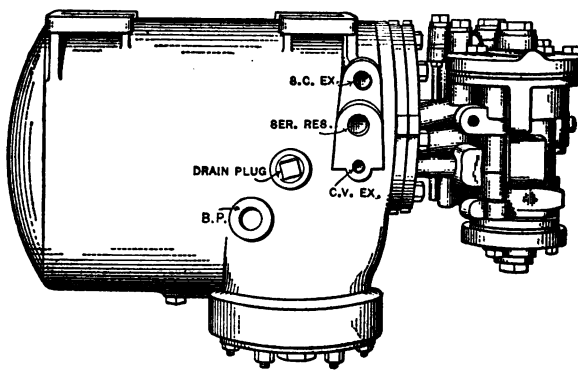

FIG. 120. No. 3-E CONTROL VALVE. SIDE VIEW.

Q. What does Fig. 120 represent?

A. It is a side view of the complete assembled control valve.

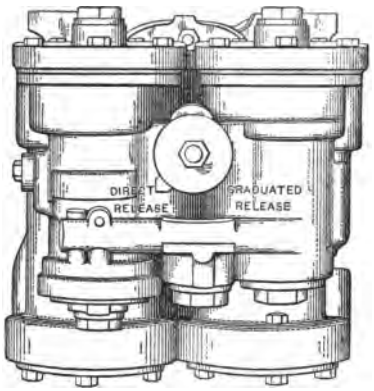

FIG. 121. NO. 3-E CONTROL VALVE. FRONT VIEW.

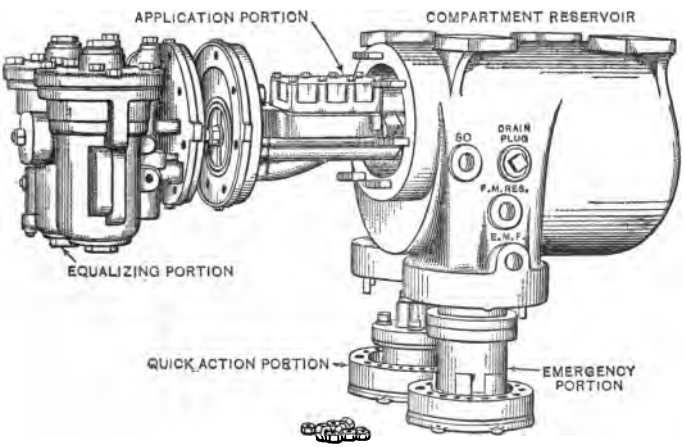

FIG. 122. NO. 3-E CONTROL VALVE, SHOWING THE DIFFERENT PORTIONS OF THE VALVE.

Digitized by Google

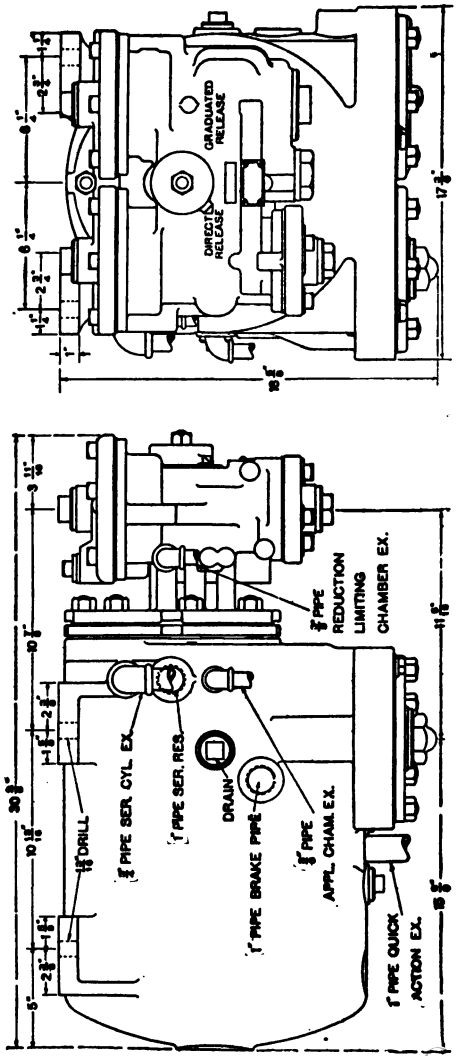

FIG. 123. No. 3-E CONTROL VALVE, OUTLINE.

Digitized by Google

Q. What is Fig. 121?

A. It is a front view of the control valve showing the equalizing portion.

Q. What is shown in Fig. 122?

A. It shows a side view of the control valve with the various parts separated to show their relative location.

Q. What is shown in Figs. 123 and 124?

A. An outline of the control valve showing the over-all dimensions and the pipe connections.

Q. Where are all the pipe connections made?

A. In the compartment reservoir, which is the only part rigidly attached to the car.

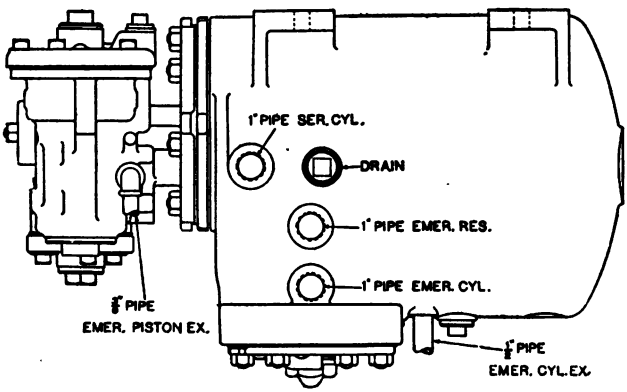

FIG. 124. NO. 3-E CONTROL VALVE, OUTLINE.

Q. What type of triple valve does the control valve resemble in this respect?

A. The "pipeless" triple valves.

Q. Referring to Figs. 125 and 126, what are the names of the detail parts of the control valve?

A. *Equalizing portion:* 2, Equalizing Body; 3, Release Piston; 4, Release Slide Valve; 5, Release Slide Valve Spring; 6, Release Graduating Valve; 7, Release Graduating

Digitized by Google

Valve Spring; 8, Release Piston Cap Nut; 9, Release Piston Ring; 10, Release Cylinder Cap; 11, Release Cylinder-Cap Gasket; 12, Square Head Cap Screw; 13, Release Piston Graduating Sleeve; 14, Release Piston Graduating Spring; 15, Release Piston Graduating Nut; 16, Check Valve; 17, Check-Valve Cap Nut; 18, Direct and Graduated Release Cap; 19, Stud and Nut for Direct and Graduated Release

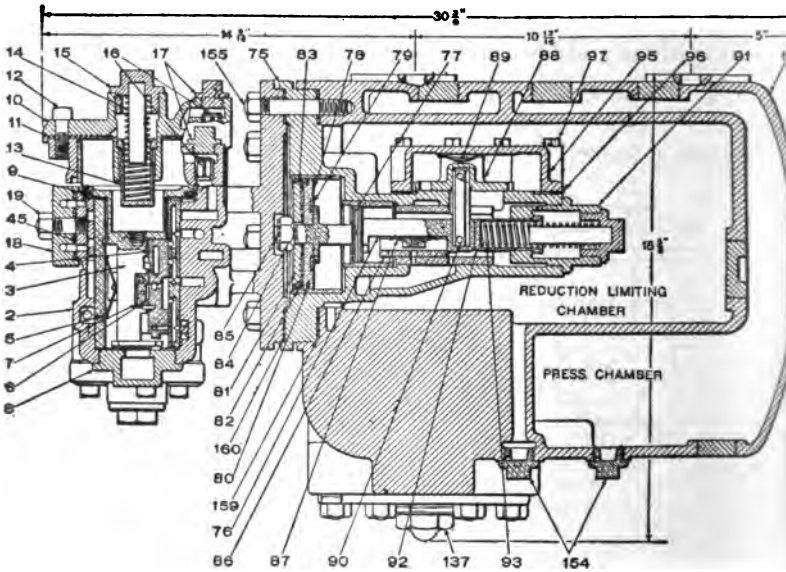

FIG. 125. NO. 3-E CONTROL VALVE. ACTUAL SECTION.

Cap; 20, Equalizing Piston; 21, Equalizing Piston Ring (Large); 22, Equalizing Slide Valve; 23, Equalizing Slide-Valve Spring; 24, Equalizing Graduating Valve; 25, Equalizing Graduating-Valve Spring; 26, Large Equalizing Cylinder Cap; 27, Large Equalizing Cylinder-Cap Gasket; 28, Square Head Cap Screw; 29, Equalizing Piston Stop Sleeve; 30, Equalizing Piston Stop Spring; 31, Equalizing Graduating Nut; 32, Equalizing Piston Ring (Small); 33,

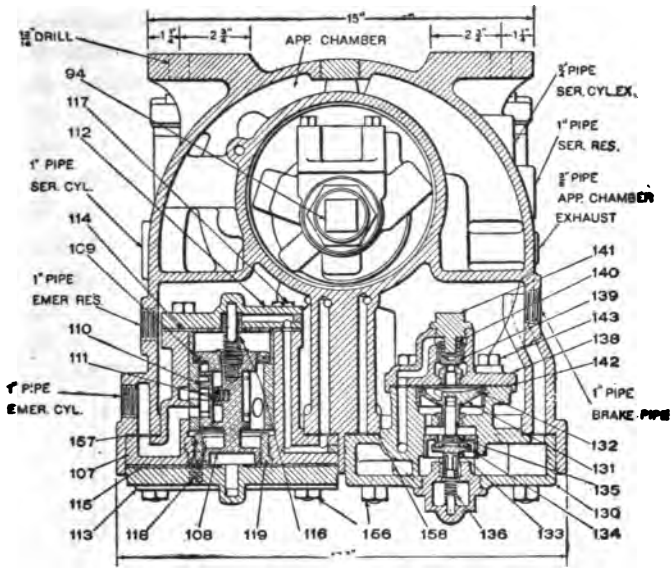

FIG. 126. NO. 3-E CONTROL VALVE, ACTUAL SECTION.

Small Equalizing Cylinder Cap; 34, Gasket for Small Equalizing Cylinder Cap; 35, Square Head Cap Screw; 36, Cap Nut for Small Equalizing Cylinder Cap; 37, Small Equalizing Piston Bush; 38, Service-Reservoir Charging Valve; 39, Charging-Valve Piston Ring; 40, Charging-Valve Piston Ring; 41, Charging-Valve Seat; 42, Charging-Valve Washer; 43, Internal Charging-Valve Nut; 44, External Charging-Valve Nut; 45, Gasket for Direct and Graduated Release Cap.

Application Portion: 75, Body; 76, Piston Stem; 77, Piston Ring (Small); 78, Piston Head; 79, Piston Seal; 80, Piston Ring (Large); 81, Piston Follower; 82, Piston Packing Leather; 83, Piston Packing Leather Expander; 84, Piston Nut; 85, Piston Cotter; 86, Exhaust Valve; 87, Exhaust Valve Spring; 88, Application Valve; 89, Application-Valve

Spring; 90, Application-Piston Bolt; 91, Spring Box; 92, Piston-Spring Sleeve; 93, Piston Spring; 94, Graduating Nut; 95, Application-Valve Cover Gasket; 97, Square Head Screw for Application-Valve Cover.

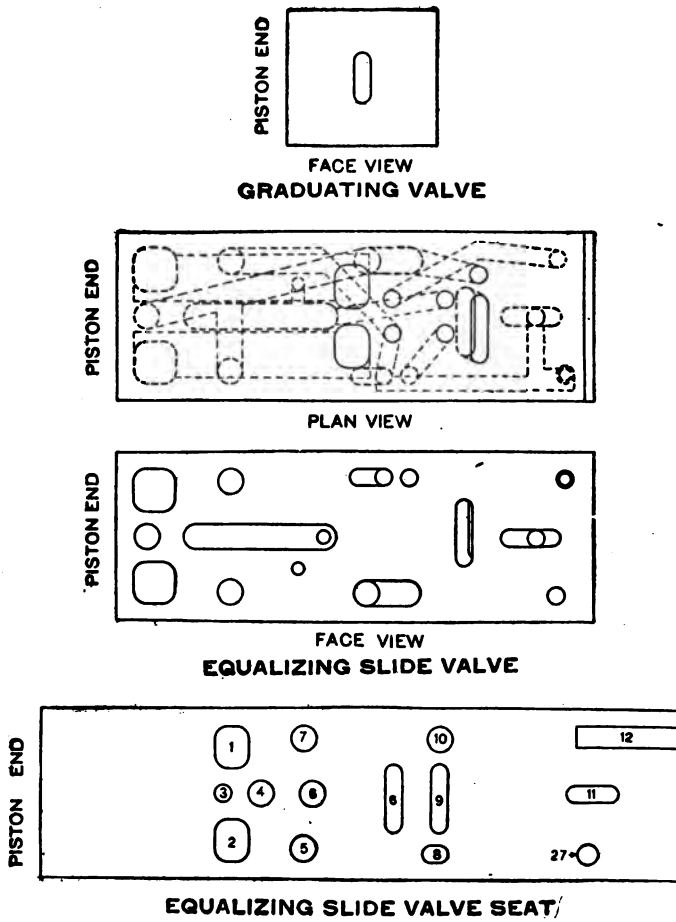

FIG. 127. EQUALIZING GRADUATING VALVE, SLIDE VALVE, AND SLIDE VALVE SEAT.

Digitized by Google

Emergency Portion: 107, Body; 108, Piston (Complete); 109, Piston Ring; 110, Slide Valve; 11, Slide-Valve Spring; 112, Small Cylinder Cap; 113, Large Cylinder Cap; 114, Small Cylinder-Cap Gasket; 115, Large Cylinder-Cap Gasket; 116, Piston Spring; 117, Square Head Cap Screw for Small Cylinder Cap; 118, Oval Fillister Head Cap Screw; 119, Emergency Piston Bush.

Quick Action Portion: 130, Body; 131, Piston (Complete); 132, Piston Ring; 133, Quick-Action Valve; 134, Quick-Action Valve Seat; 135, Quick-Action Valve Nut; 136, Quick-Action Valve Spring; 137, Quick-Action Valve-Cap Nut; 138, Quick-Action Valve Cover; 139, Quick-Action

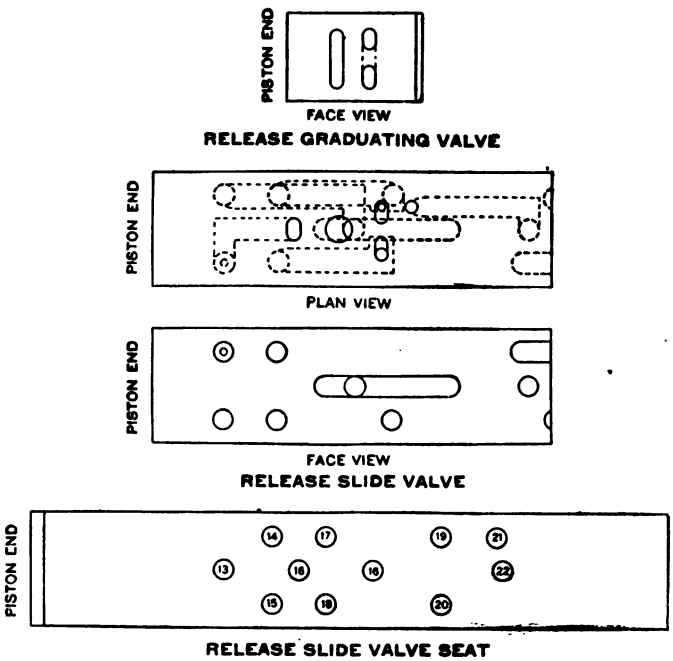

FIG. 128. RELEASE GRADUATING VALVE, SLIDE VALVE, AND SLIDE VALVE SEAT.

Digitized by Google

Closing Valve; 140, Quick-Action Closing Valve Spring; 141, Cover Cap Nut; 142, Cover Gasket; 143, Square Head Cap Screw for Cover.

Reservoir: 153, Triple-Compartment Reservoir; 154, Cap Nut; 155, Stud with Hex. Nut; 156, Stud with Hex. Nut; 157, Emergency Cylinder Gasket; 158, Quick-Action Cylinder Gasket; 159, Large Reservoir Gasket; 160. Equalizing Cylinder Gasket.

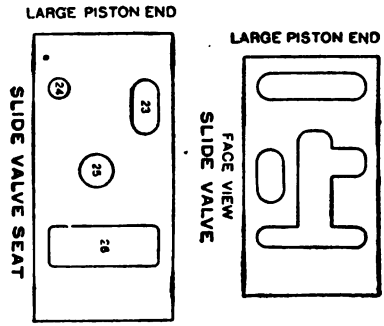

FIG. 129. EMERGENCY SLIDE VALVE AND SLIDE VALVE SEAT.

Q. What do Figs. 127, 128 and 129 represent?

A. They show views of the face of the equalizing graduating valve, slide valve, and slide-valve seat; the release graduating valve, slide valve, and slide-valve seat; and the emergency slide valve and slide-valve seat.

Q. To what chambers and parts do these various ports connect?

A. *Equalizing Slide-Valve Seat:* 1, Emergency Reservoir Check Valve (under side); 2, Brake Pipe; 3, Direct and Graduated Release Cap (open only when cap is adjusted for graduated release); 4, Reduction Limiting Chamber Exhaust; 5, Small End (Chamber G) of Service Reservoir Charging Valve; 6, Reduction Limiting Chamber; 7, Large End (Chamber K) of Service Reservoir Charging Valve; 8,

Release Slide-Valve Chamber (Chamber E); 9, Application Chamber and Front of Application Piston (Chamber C); 10, Emergency Reservoir; 11, Pressure Chamber; 12, Slotted Port; 27, Small Equalizing Piston (Chamber F).

Release Slide-Valve Seat: 13, Large Emergency Piston (Chamber P); 14, Small Emergency Piston (Chamber S); 15, Direct and Graduated Release Cap (open only when cap is adjusted for graduated release); 16, Emergency Piston Exhaust; 17, Direct and Graduated Release Cap (open only when cap is adjusted for direct release); 18, Application Chamber Exhaust, also Direct and Graduated Release Cap (the latter open only when cap is adjusted for Direct Release); 19, Application Chamber; 20, Quick-Action Closing Valve; 21, Emergency Reservoir; 22, Small Equalizing Piston (Chamber F).

Emergency Slide-Valve Seat: 23, Service Brake Cylinder; 24, Back of Application Piston (Chamber M); 25, Emergency Cylinder Exhaust; 26, Emergency Cylinder.

Q. What do Figs. 130 to 144 represent?

A. They are diagrams of the control valve and compartment reservoir with the movable parts in different positions as they occur in operation. The actual form of the parts has been entirely disregarded, and the ports are shown in the simplest manner possible to indicate the connections made. In all except Fig. 130, only those ports which are in action are shown.

Q. What position of the control valve is illustrated in Fig. 130, and when does it occur?

A. "Normal" position, occupied by the various parts of the valve when properly assembled and before air pressure is admitted to the brake system. It indicates the relation of all the ports and detail parts of the valve.

Q. What chambers are always subject to brake-pipe pressure?

Digitized by Google

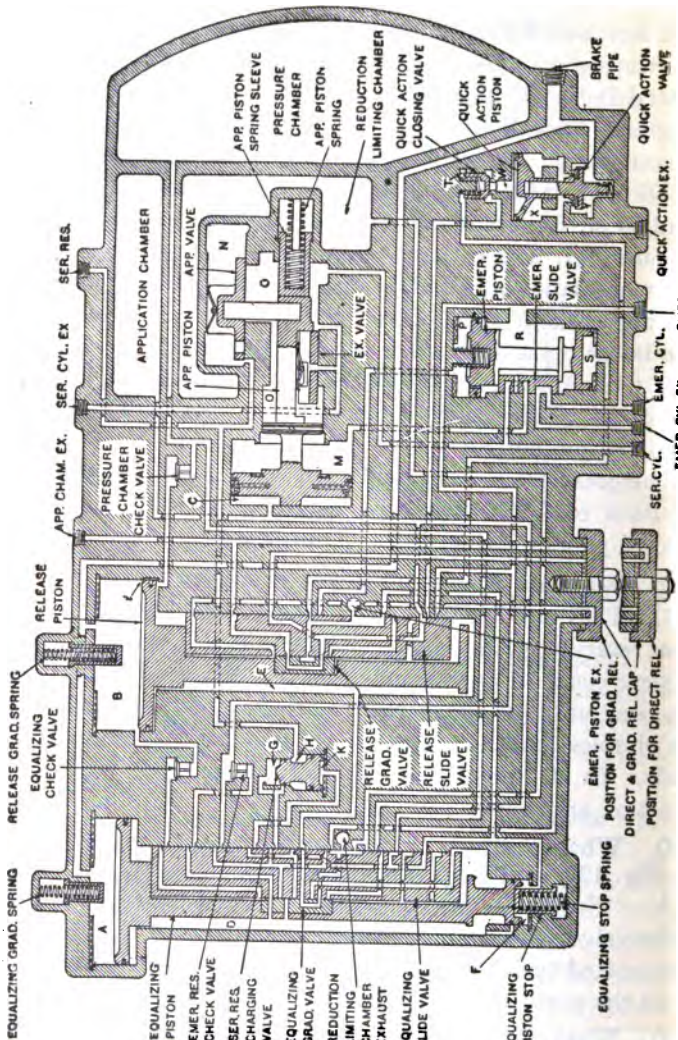

FIG. 130. NORMAL POSITION.

Digitized by Google

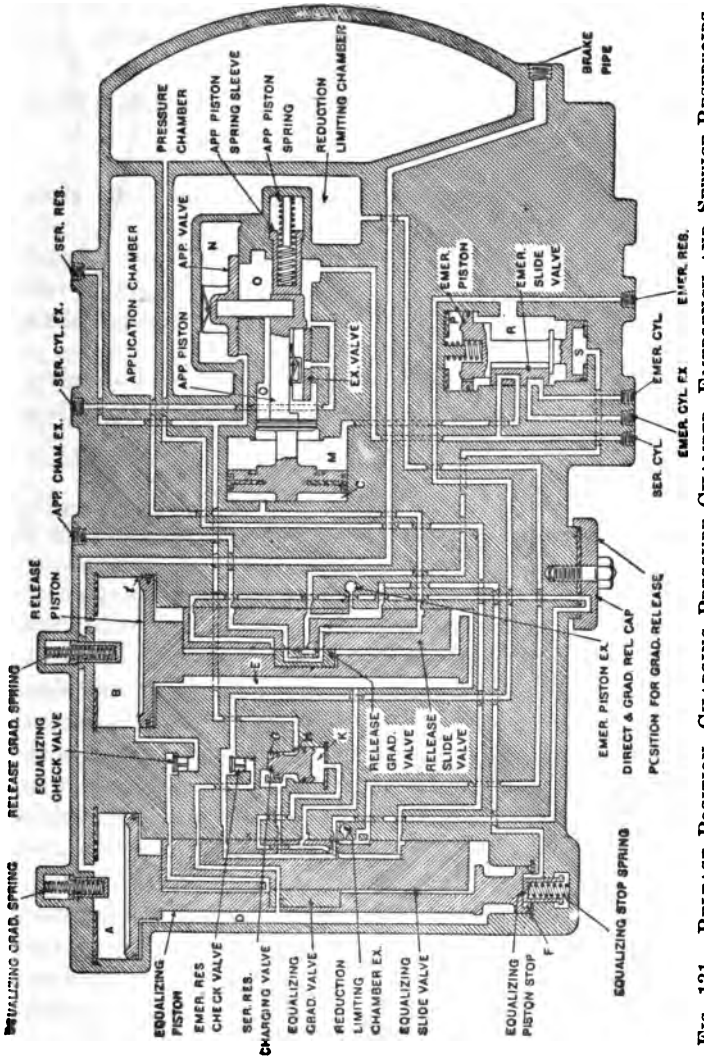

FIG. 131. RELEASE POSITION, CHARGING PRESSURE CHAMBER, EMERGENCY AND SERVICE RESERVOIRS.

Digitized by Google

A. Chamber *A* above the equalizing piston; chamber *B* above the release piston; and the chamber below the quick-action valve.

Q. What chamber is the service brake cylinder always connected with?

A. Chamber *O* above the exhaust valve.

Q. What chambers is the service reservoir always connected with?

A. Chamber *N* above the application valve, and chamber *H* around the center of the service reservoir charging valve.

Q. What chamber is the emergency cylinder always connected with?

A. Chamber *T* above the quick-action closing valve.

Q. What chamber is the emergency reservoir always connecting to?

A. Chamber *R* over the emergency slide valve.

Q. When the brake system is being charged and air is admitted to the brake pipe, what takes place in the control valve? (See Fig. 131.)

A. Air enters the control valve at the brake-pipe connection and passes to chambers *A* and *B*, and through feed groove *i* to chamber *E*. As soon as the pressure in chamber *A* is sufficient to overcome the resistance of the equalizing stop spring, the equalizing piston is forced down until the lower end seats on the gasket in chamber *F*. Air can then flow from chamber *B* past the equalizing check valve into chamber *D*. From chamber *D*, the air flows through the equalizing slide valve past the emergency reservoir check valve, and from there it goes in two directions: First, to chamber *R* and the emergency reservoir; second, through the equalizing slide valve to the service reservoir check valve and the service reservoir, and through the graduated release cap and release slide valve to chamber *E* (which is also charged through the small feed groove *i*). This last mentioned connection is made only when the graduated

Digitized by Google

release cap is in the graduated release position; when that cap is in the direct release position, chamber *E* is charged only by feed groove *i*. Air also flows from chamber *E* through the equalizing slide valve to chamber *K* below the service reservoir charging valve, and also the *pressure chamber*. Since the pressure in chambers *D* and *E* at this time is practically equal, and the area of the charging valve facing chamber *K* is larger than that in chamber *G* at the top, the charging valve will be held in its upper position until the service reservoir, which connects at all times with chamber *H* around the middle of the charging valve, is charged to the same pressure as that in chamber *E* and the *pressure chamber*.

Q. What other connections are made in the Release Position?

A. Chamber *F* below the equalizing piston is connected through the release slide valve with the emergency piston exhaust and *atmosphere*, thus holding the equalizing piston firmly in release position. Chamber *S* below the emergency piston is also connected to the same exhaust opening, thereby holding the emergency piston firmly in its proper position. The *reduction limiting chamber* is connected through the equalizing slide valve to the reduction limiting chamber exhaust and atmosphere. The *application chamber* and chamber *C* in front of the application piston are connected through the release slide valve and graduating valve with the application chamber exhaust and atmosphere. The service brake cylinder is connected through the exhaust slide valve of the application portion with the service brake-cylinder exhaust to the atmosphere. And the emergency brake cylinder is connected through the emergency slide valve to the emergency cylinder exhaust and the atmosphere. The small cavity in the release graduating valve is always connected to the emergency piston exhaust so as

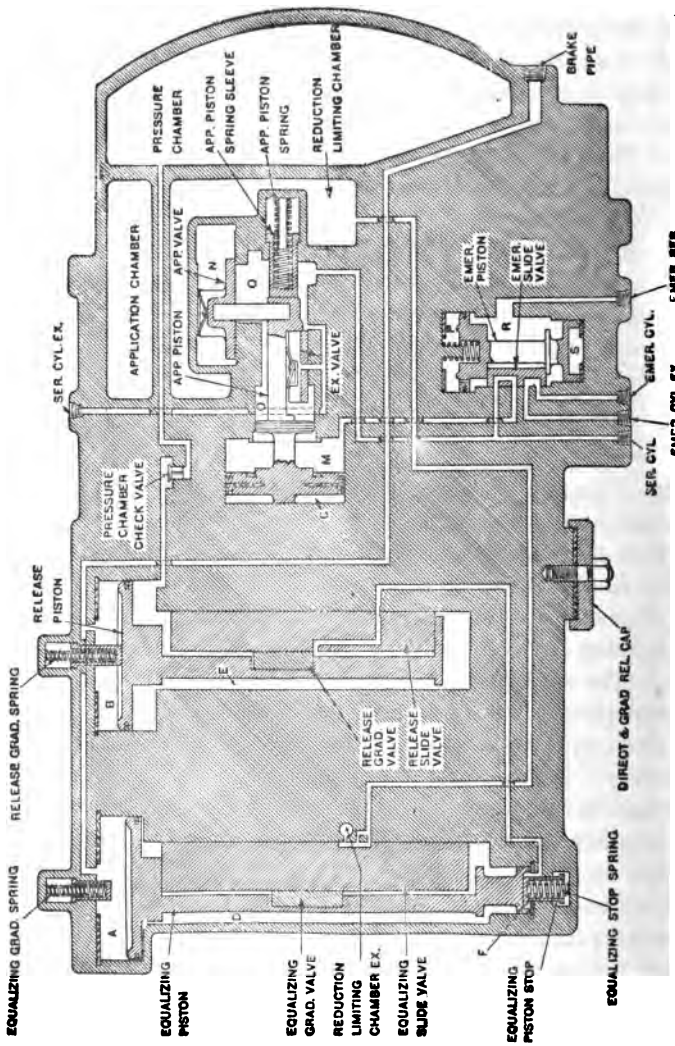

FIG. 132. PRELIMINARY SERVICE POSITION.

Digitized by Google

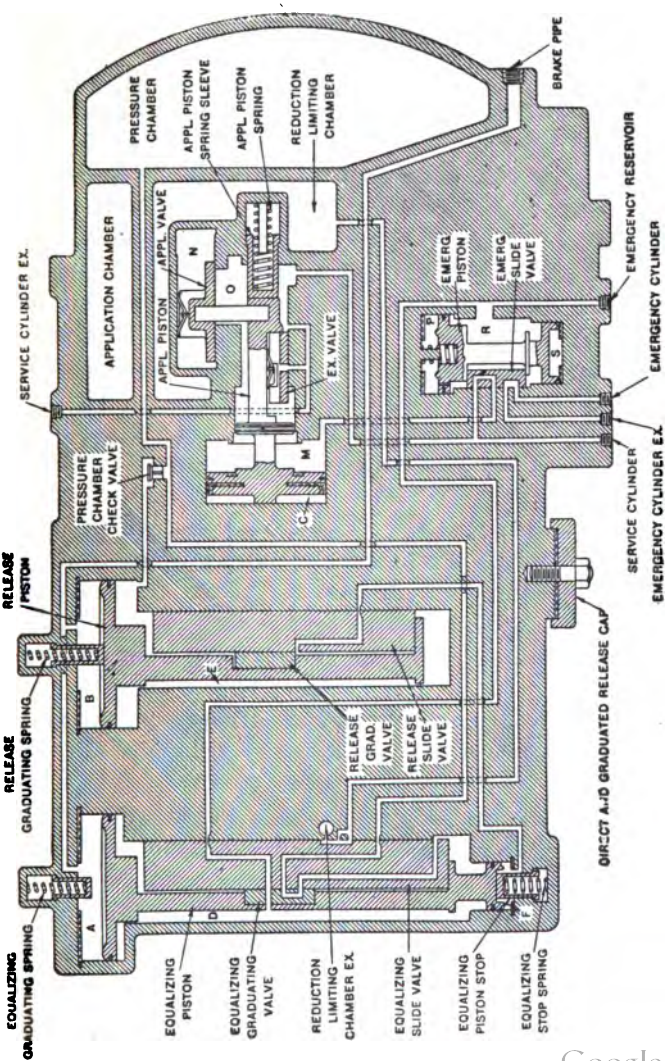

FIG. 133. SECONDARY SERVICE POSITION.

Digitized by Google

to insure a sufficient pressure on the graduating valve to hold it to its seat. This cavity performs no other service.

Q. After the equipment is fully charged and a service reduction of brake-pipe pressure is made, what occurs in the control valve? (See Figs. 132 to 134.)

A. The pressure in chambers *A* and *B* will be reduced below that in chambers *D* and *E* tending to force the pistons and their valves upward. But since the chamber *F*, below the equalizing piston, is open to the atmosphere, through the release slide valve and the emergency piston exhaust, the release piston will move first upward until it strikes the graduating spring sleeve. There is a small amount of lost motion between the release piston and graduating valve, and a somewhat greater lost motion between the piston and the slide valve, so that during the first upward movement of the piston, the slide valve remains in its release position keeping chamber *F* open to the atmosphere, which insures that the equalizing piston will not move upward until after the release piston. Thus the release piston first moves upward as above described to *preliminary service* position, closing feed groove *i*, and the port leading from the *application chamber* to the atmosphere. It also closes the connection between chamber *F* and the atmosphere and makes connection between that chamber and chamber *E*. (See Fig. 132.) This results in permitting air from the *pressure chamber* to raise the pressure-chamber check valve and flow to chamber *F*, balancing the pressures in chambers *F* and *D* above and below the small end of the equalizing piston. This permits the equalizing piston to move upward until the shoulder on the piston stem strikes the slide valve, as shown in Fig. 133, when a connection is momentarily made between the emergency reservoir and chamber *D*, which prevents a drop in pressure in that chamber due to the upward movement of the equalizing piston. (The volume of

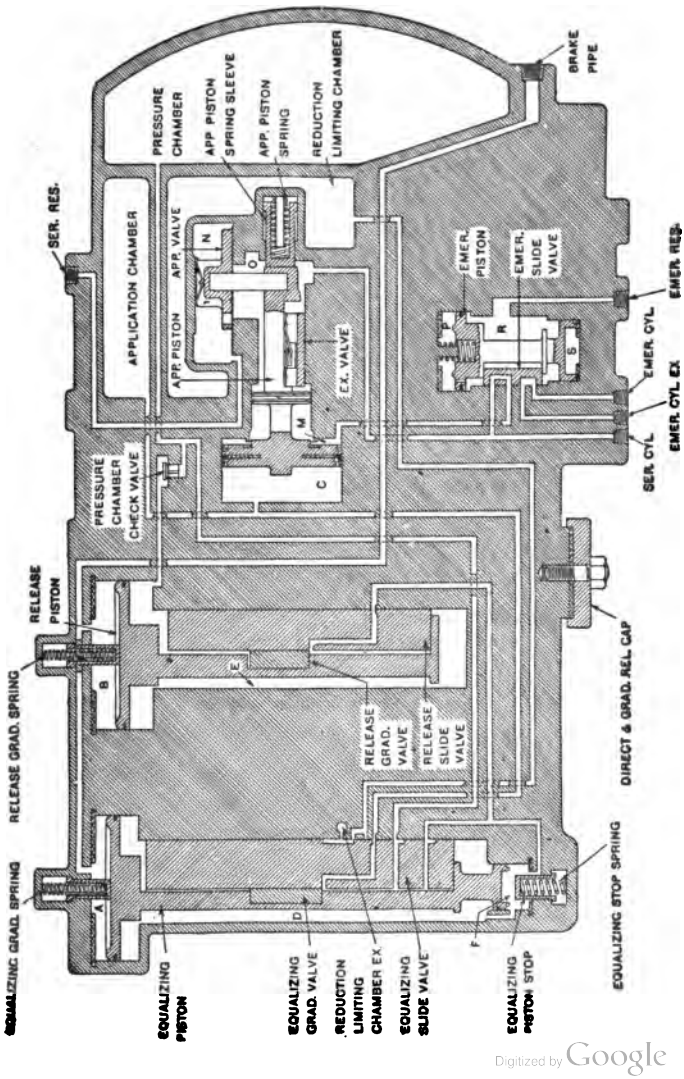

FIG. 134. SERVICE POSITION.

Digitized by Google

chamber *D* is so small compared with the displacement of the piston as to require this arrangement.) At the same time, chamber *D* and the *pressure chamber* are connected through the equalizing slide valve and graduating valve to keep their pressures equal. Of course, this position is occupied only an instant, as the pressure in chamber *D* causes the equalizing piston to continue its upward movement carrying the slide valve and graduating valve with it to the *service position* where the piston strikes its graduating sleeve, as shown in Fig. 134.

In this position, chambers *F* and *D* are connected by a feed port around the small end of the equalizing piston. The *pressure chamber* is connected to chamber *D:* First, directly through the equalizing slide valve; second, past the pressure chamber check valve and chamber *E* through the release slide valve and equalizing slide valve, also through chamber *F*. From chamber *D*, air flows through the equalizing slide valve to the *application chamber* and chamber *C* on the face of the application piston, forcing the latter to the application position. This closes the service cylinder exhaust and opens connection between the *service reservoir* and chamber *N* to the service brake cylinder, thus applying the brakes. The air flowing to the service brake cylinder also flows by way of the emergency slide valve to chamber *M*, thereby equalizing the pressures in chambers *M* and *O*. The *reduction-limiting chamber* and the emergency brake cylinder are still connected to the atmosphere as in release position.

Q. If the brake-pipe reduction made was fifteen pounds, how long will the parts of the control valve remain in service position?

A. Until the pressure in chambers *D* and *E* and the *pressure chamber* falls slightly below that in the brake pipe and chambers *A* and *B*.

Digitized by Google

Q. What will occur then?

A. The pistons and graduating valves will move down until the shoulder on the piston stem strikes the slide valve to *Service Lap* position. This closes communication between the *pressure chamber* and the *application chamber*, and holds whatever pressure there is in chamber *C* and the *application chamber*. As soon as the pressure in the service brake cylinder and chambers *C* and *M* is slightly above that held in chamber *C*, the application piston will move back and close communication between the service reservoir and service brake cylinder as shown in Fig. 135.

Q. If brake-cylinder pressure becomes reduced through leakage or otherwise, what will happen?

A. The application valve will open and admit enough air from the service reservoir to the brake cylinder to reinstate the pressure, in the same manner as with the distributing valve of the "ET" equipment (see page 241). Consequently brake-cylinder pressure is maintained practically constant within the capacity of the service reservoir.

Q. What does the movement of the release piston and graduating valve to lap position accomplish?

A. It performs no functions whatever.

Q. What other parts of the control valve operate at this time?

A. All the other parts remain as in service position.

Q. If the engineer makes a full-service reduction, will the parts go to service lap as above described?

A. No, they will remain in service position.

Q. What is a full-service reduction with this equipment?

A. Twenty-four pounds, just as with any other brake equipment using 110 pounds brake-pipe pressure.

Q. If the engineer makes more than a full-service reduction, what will happen?

A. The pressure in chambers *A* and *B* will fall below

Digitized by Google

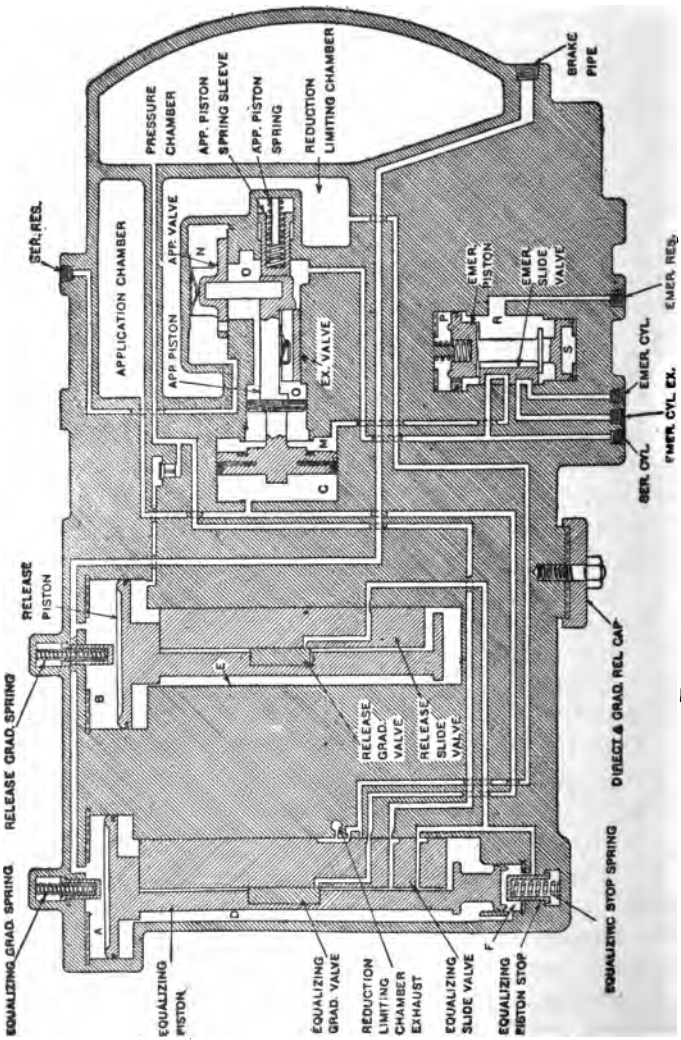

FIG. 135. SERVICE LAP POSITION.

Digitized by Google

that in chambers *D* and *E*, so that the equalizing piston is forced upward beyond the service position, compressing its graduating spring, to the position called the *over-reduction* position as shown in Fig. 136. The release piston does not move upward because its graduating spring is heavier and requires a considerably greater differential to compress it.

Q. What connections are made in the over-reduction position?

A. Chamber *D* is now connected through the equalizing slide valve with the *reduction-limiting chamber* which has heretofore been maintained at atmospheric pressure, and air will now continue to expand from the *pressure chamber* (and chambers *D* and *E*) into the *reduction-limiting chamber*, at the same rate that in service position it expanded into the *application chamber*. The *application chamber* and chamber *C* are also connected to chamber *G* above the charging valves, while chamber *K* below the charging valve is connected to chamber *D* through the equalizing slide valve. The other connections are as in Service Position.

Q. What change takes place in application-chamber pressure during this time?

A. None. Any reduction in *application-chamber* pressure is reinstated by air leaking by the small end of the charging valve from the service reservoir.

Q. What position must the charging valve have at this time?

A. Since the pressure in chamber *G* remains constant while that in chamber *K* (and chamber *D*) is reducing, it follows that the charging valve will be held firmly down against its lower seat.

Q. Suppose that only a small over reduction in brake-pipe pressure is made, how long will the parts of the control valve remain in over-reduction position?

A. Until the pressure in chambers *D* and *E* and the *pressure chamber* falls slightly below that remaining in the

Digitized by Google

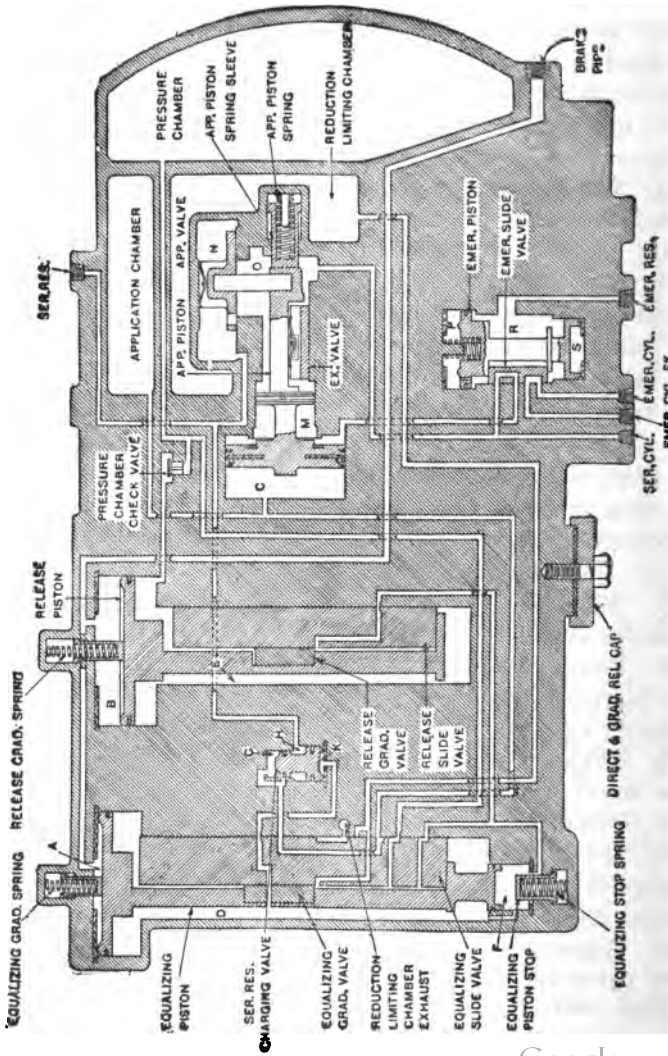

FIG. 136. OVER-REDUCTION POSITION.

Digitized by Google

brake pipe, when the equalizing piston and graduating valve will be forced downward to the *over-reduc ion lap* position, as shown in Fig. 137. This closes connection between the *pressure chamber* and the *reduction-limiting chamber* preventing any further flow of air to the latter.

Q. Are any other changes in port connections made in over-reduction lap position?

A. The equalizing graduating valve closes connection between chambers *D* and *K*, and the release piston and graduating valve move downward, closing connection between chambers *E* and *D*. These closures are, however, only incidental and have no effect on the existing pressures. All other parts and pressures remain as in over-reduction position.

Q. How long can an over-reduction be made in this manner?

A. Until the *pressure chamber* and *reduction-limiting chamber* become equalized in pressure.

Q. If the reduction in brake-pipe pressure is carried beyond this point, what will happen?

A. Since the pressure in chambers *D* and *E* cannot reduce any further, a sufficient differential will be built up on the two sides of the equalizing and release pistons to force them to emergency position.

Q. What are the pressures of equalization between the pressure chamber and reduction-limiting chamber?

A. Sixty pounds when carrying 110 pounds brake-pipe pressure, and 35 pounds when carrying 70 pounds brake-pipe pressure.

Q. What brake-pipe reductions, therefore, are necessary to reach this point?

A. Fifty-pound reduction from 110, or 35-pound reduction from 70.

Q. How do these reductions compare with those required for a full-service application?

Digitized by Google

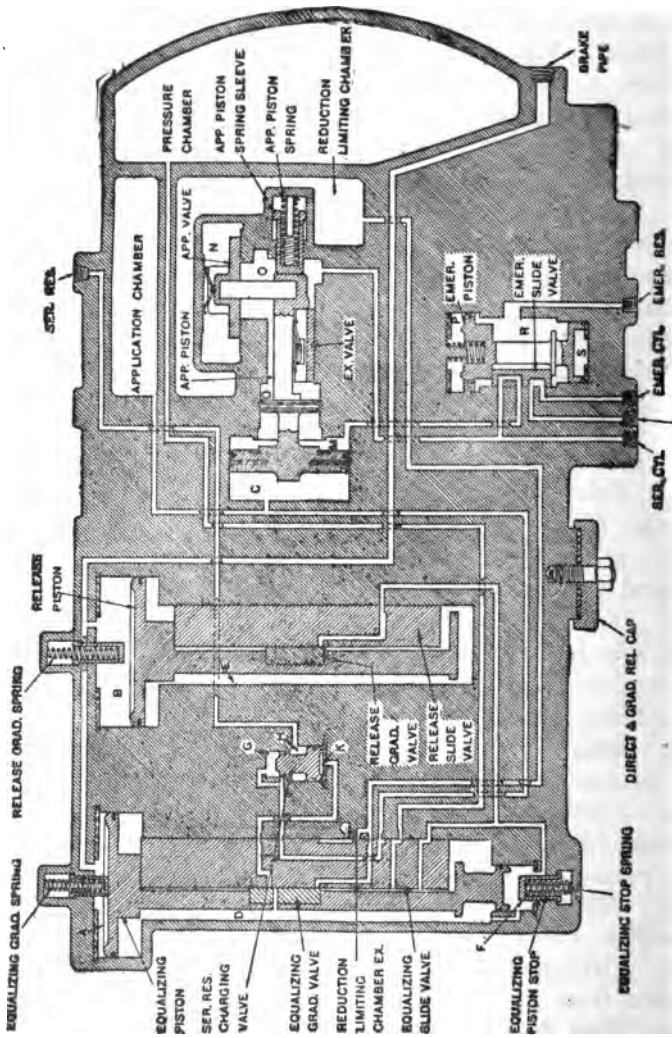

FIG. 137. OVER-REDUCTION LAP POSITION.

Digitized by Google

A. They are just about twice as great.

Q. With the parts of the control valve in either service lap or over-reduction lap position, what occurs when the engineer releases the brakes?

A. The increase in brake-pipe pressure in chambers *A* and *B* over that existing in chambers *D* and *E* will cause the pistons and their valves to move downward. The equalizing piston moves first, the parts being designed to require a somewhat greater differential to move the release piston and its valve. Consequently the parts will first assume the position known as *preliminary release*, as shown in Fig. 138, when the equalizing piston strikes the piston stop at its lower end. Chamber *F* is then connected to the *pressure chamber* by way of the equalizing slide valve, so that the pressure in chamber *F*, in addition to the force of the stop spring, insures that the equalizing piston and its valves will hestitate in this position. At the same time, chamber *E* is connected through the equalizing slide valve and graduating valve to the reduction-limiting chamber exhaust, which causes a momentary reduction of pressure in chamber *E*, thereby positively insuring that the release piston is forced to the release position, as shown in Fig. 139. Consequently the *preliminary release* position is only occupied for an instant, and is the first step in the movement of the parts to the full-release position.

Q. What is the second step in the movement of the control-valve parts to full-release position?

A. The venting of air from chamber *E* through the equalizing slide valve and graduating valve and reduction-limiting chamber exhaust, results in forcing the release piston and its valves promptly to release position while the equalizing piston and its valves hesitate momentarily in the preliminary release position as shown in Fig. 139. This position is known as *Secondary Release* position, in which

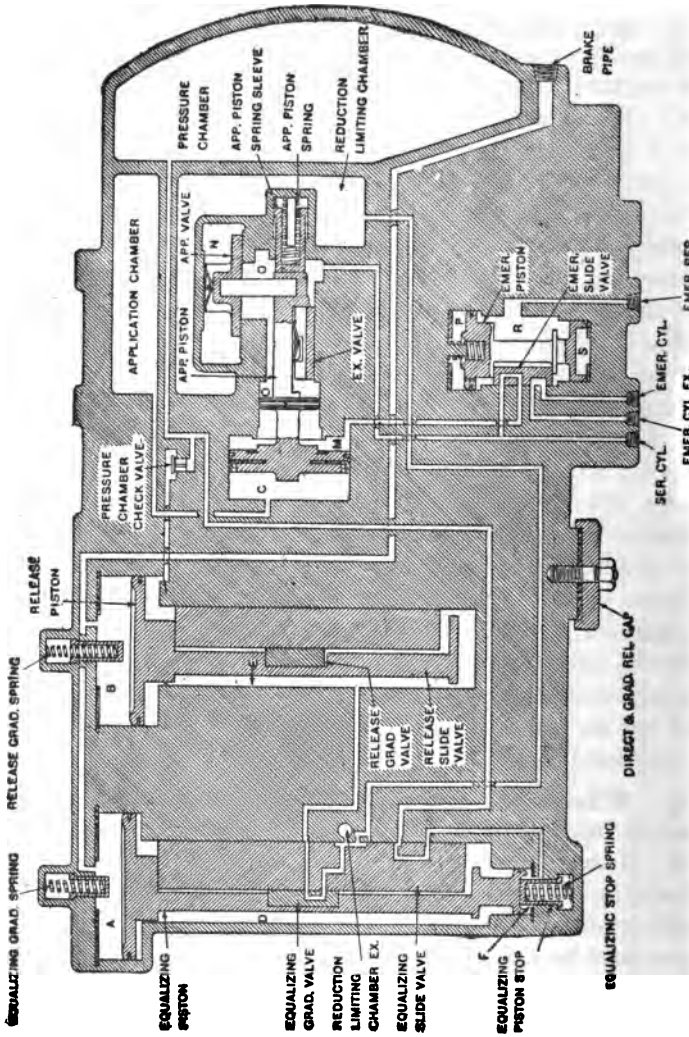

FIG. 138. PRELIMINARY RELEASE POSITION.

Digitized by Google

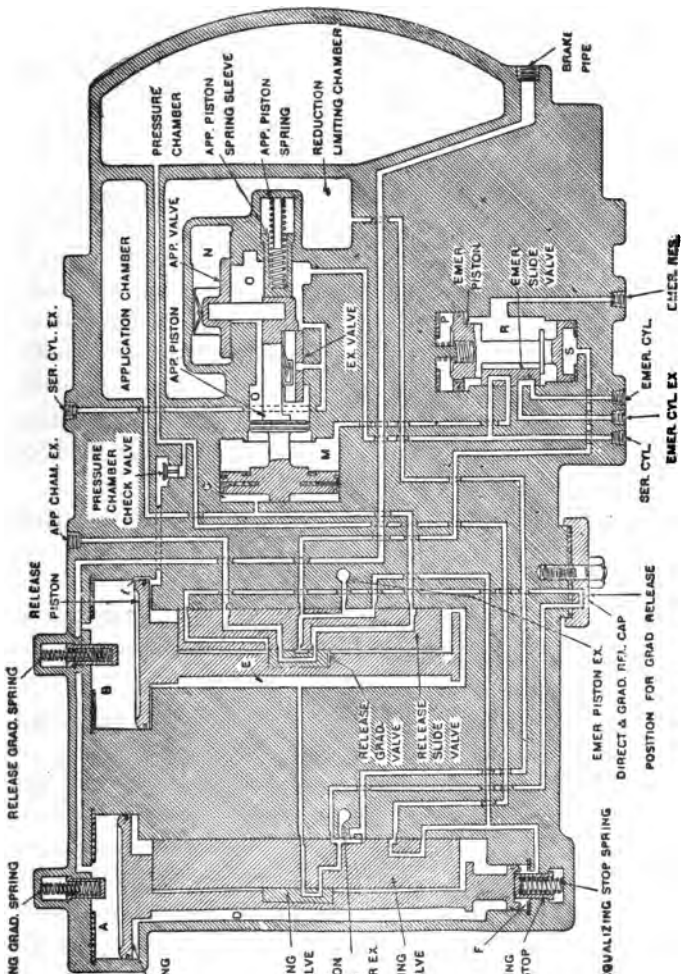

FIG. 139. SECONDARY RELEASE POSITION.

Digitized by Google

connection is made between chamber *F* through the release slide valve to the emergency-piston exhaust. Also the *pressure chamber* is connected through the equalizing slide valve to the same port which connects chamber *F* to the atmosphere. At first the pressure in the *pressure chamber* tends to hold up the pressure in chamber *F* to insure that the release piston will move completely to the release position, but as these chambers are connected to the atmosphere through small ports, their pressure will reduce, thereby causing the equalizing piston to move on downward. In this movement, the equalizing slide valve restricts and finally stops the flow of air from the *pressure chamber* to chamber *F*, which results in the latter becoming rapidly reduced to atmospheric pressure, and causing the equalizing piston and its valves to move positively to release position, as shown in Fig. 140.

Q. Is the control valve now in full release position?

A. Not quite, as the charging valve is still closed.

Q. Why is this?

A. So as to insure that the *pressure chamber* will be almost completely recharged before the service reservoir begins to recharge.

Q. What connections are made in the graduated-release position as shown in Fig. 140?

A. The *application chamber* and chamber *C* are connected through the release slide valve and graduating valve to the application-chamber exhaust and the atmosphere. This causes the application piston and its valves to move to the release position, connecting the service brake cylinder to the exhaust, as in the distributing valve. Air can also flow from chamber *B* past the equalizing check valve to chamber *D*, and through the feed groove *i* to chamber *E*. From chamber *E*, air can flow through the equalizing slide valve to chamber *K* below the charging valve, and to the

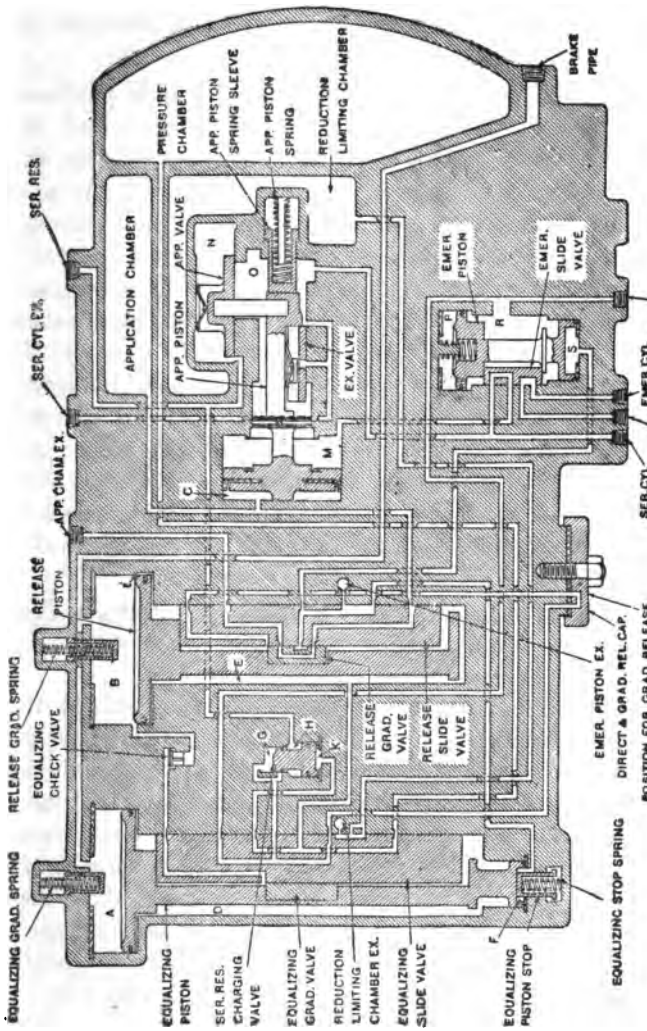

FIG. 140. GRADUATED RELEASE AND RELEASE, CHARGING PRESSURE CHAMBER ONLY.

Digitized by Google

pressure chamber. The emergency reservoir is connected to chamber *G* above the charging valve, and through the graduated release cap to chamber *E*.

Q. How long will the parts remain in this position?

A. If a complete release of the brakes is desired, the pistons and their valves will remain permanently in this position until another application of the brakes. As soon as the air flowing into chamber *E*, through feed groove *i* and from the emergency reservoir, raises its pressure to within five pounds of that remaining in the emergency reservoir (which has been held during the application charged to its full pressure) the pressure in chamber *K*, acting on the large end of the charging valve, will overcome the pressure in chamber *G* acting on the small end, and will cause it to move to its upper seat, connecting the emergency reservoir to the service reservoir, as well as the other connections described under Release Position and shown in Fig. 131. This will result in a complete release of the brakes and recharging of all chambers and reservoirs.

Q. If a graduated release is desired and the brake-pipe pressure is only partly reinstated, what will occur in the control valve?

A. Assuming that the *graduated-release cap* is in the graduated-release position, the connections between the *emergency reservoir* and chamber *E* through the equalizing slide valve, graduated-release cap and release slide valve will tend to raise the pressure in chamber *E* and the *pressure chamber* above the partly reinstated pressure in chamber *B*. As soon as the difference in pressure between these two chambers is sufficient to overcome the frictional resistance, the release piston and graduating valve are forced upward to the *graduated-release lap* position, shown in Fig. 141.

Q. What change in port connections occurs in graduated release lap position?

Digitized by Google

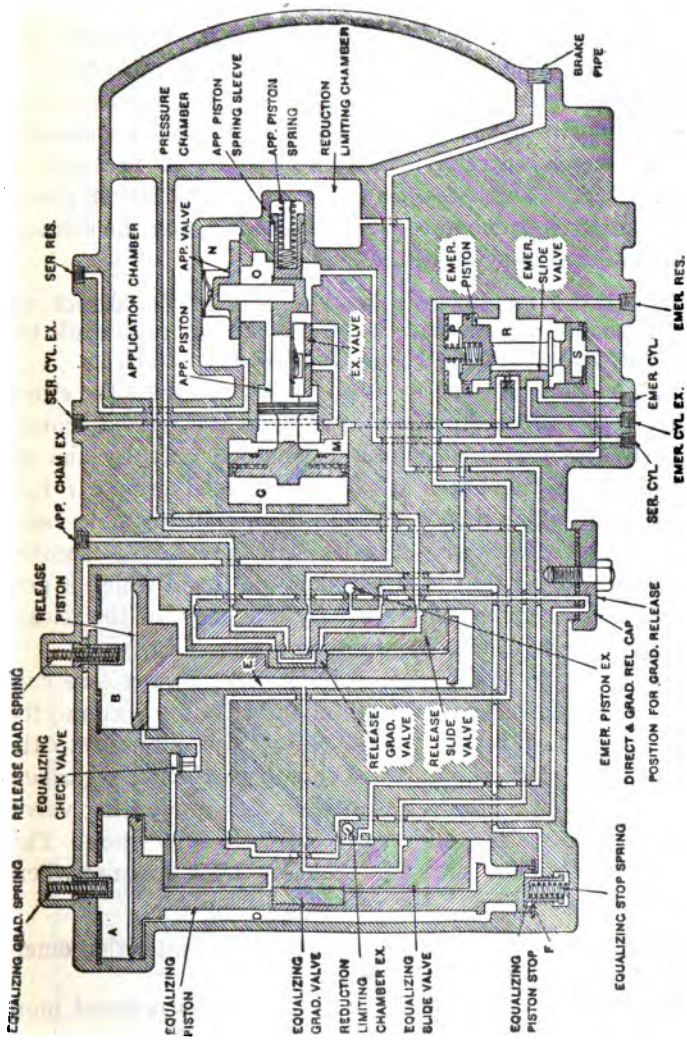

FIG. 141. GRADUATED RELEASE LAP POSITION.

Digitized by Google

A. The movement of the release-graduating valve cuts off connection between the emergency reservoir and chamber *E*, thereby preventing any further recharging of that chamber and the *pressure chamber*. It also closes connection between the *application chamber* and its exhaust outlet, which entraps a certain amount of pressure in chamber *C*. This pressure causes the application piston and its valves to move to lap position and stop the exhaust of service brake-cylinder air.

Q. If the graduated-release cap is in the direct release position, how will it affect the operation of the control valve during release? (See Fig. 142).

A. At such times there is no connection from the emergency reservoir to *chamber E* or the *pressure chamber;* consequently the *pressure chamber* is charged only by the air coming from the brake pipe through feed groove *i* into chamber *E* which passes through the equalizing slide valve to the *pressure chamber*. As a result, the pressure in chamber *E* cannot exceed that in the brake pipe (from which it gets its air) and there can never be any tendency for the release piston to move upward again as in graduated release.

Moreover, in this position of the graduated-release cap, the *application chamber* and chamber *C* are connected through a port in the release slide valve directly to the atmosphere at the application chamber exhaust, regardless of the position of the release piston and graduating valve, so long as the release slide valve is in release position. This insures a complete release of brake-cylinder pressure whenever the valve goes to the release position.

Q. When will the control valve go into the emergency position?

A. Whenever the brake-pipe pressure is reduced more rapidly than the predetermined rate for service applications; or when the brake-pipe reduction is continued below the

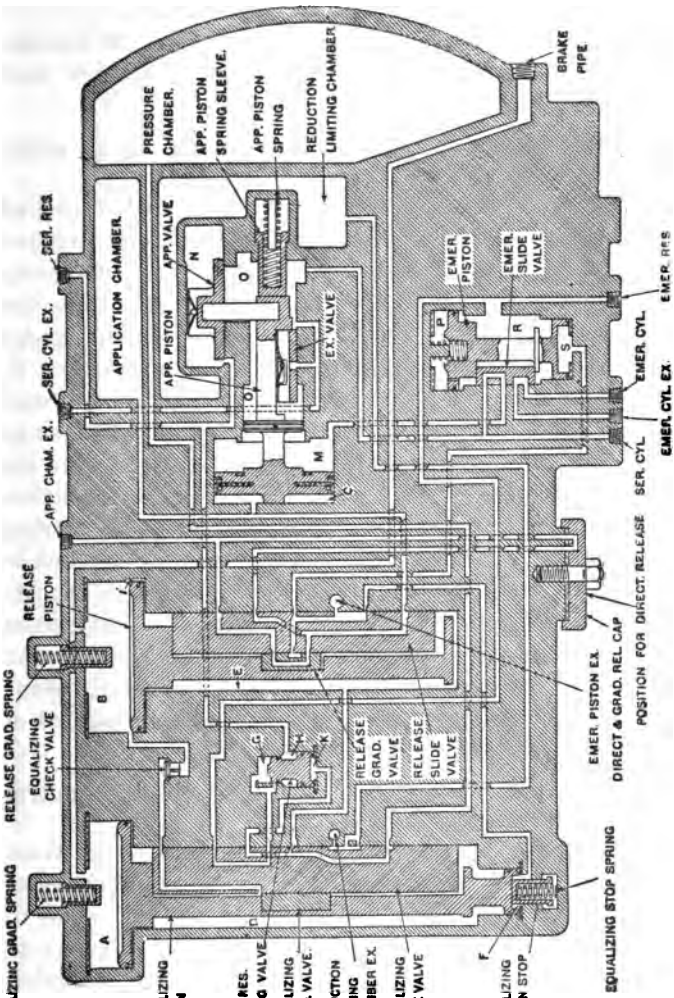

FIG. 142. DIRECT RELEASE, CHARGING PRESSURE CHAMBER ONLY.

Digitized by Google

point at which the *pressure* and *reduction-limiting chambers* equalize ("over-reduction" feature), or whenever leakage or any other cause reduces brake-pipe pressure below that point (protection feature).

Q. What occurs in the control valve due to an emergency application? (See Figs. 143 and 144).

A. The large difference in pressures on the two sides of the equalizing and release pistons causes them both to move upward to the extreme position against their cylinder-cap gaskets. In this position air may flow directly from the emergency reservoir to chamber *E*, thence to the under side of the quick-action closing valve. Since chamber *T*, above the quick-action closing valve, is always in communication with the emergency brake cylinder, and since at this time there is no pressure in that cylinder, the air from the emergency reservoir will force the quick-action closing valve upward, and flow into chamber *W*, forcing the quick-action piston downward and opening the quick-action valve, thus venting brake-pipe pressure to the atmosphere through the quick-action exhaust. This causes the rapid transmission of serial quick-action through the train as with the ordinary quick-action triple valve, except that the venting takes place to the atmosphere instead of to the brake cylinder.

Q. What other connections are made in the control valve, in an emergency application?

A. Air from the emergency reservoir also flows from chamber *E* directly to the *application chamber* and chamber *C*, thereby forcing the application piston and its valves to the application position, which connects the service reservoir to the service brake cylinder. At the same time, chamber *P* above the large emergency piston is connected through the release slide valve with the emergency-piston exhaust, which allows the emergency-reservoir pressure in chamber

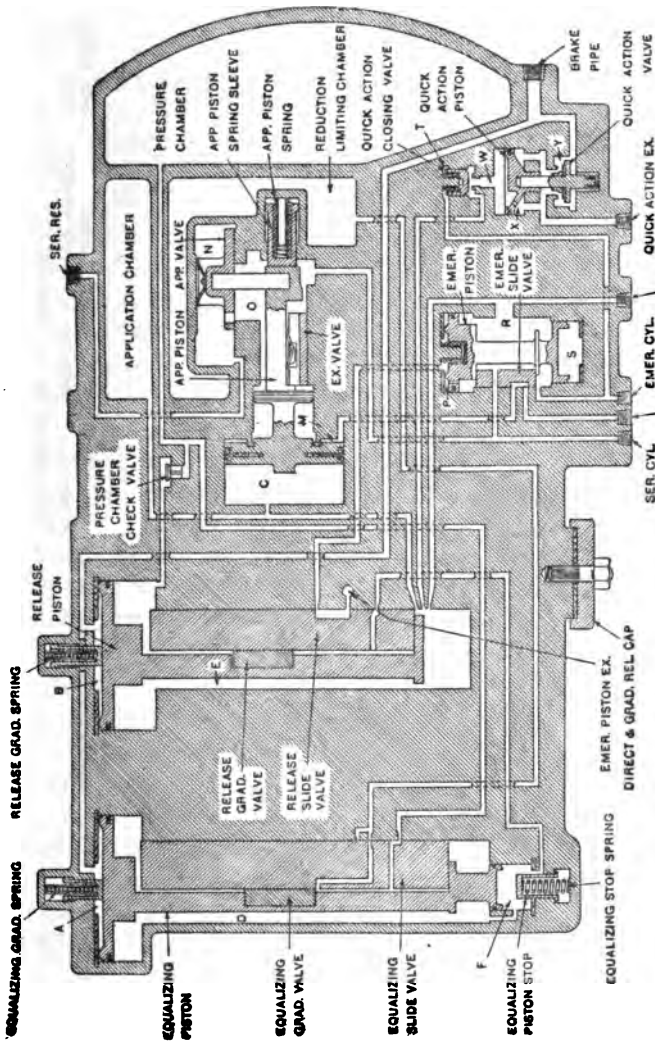

FIG. 143. EMERGENCY POSITION, QUICK ACTION VALVE VENTING.

Digitized by Google

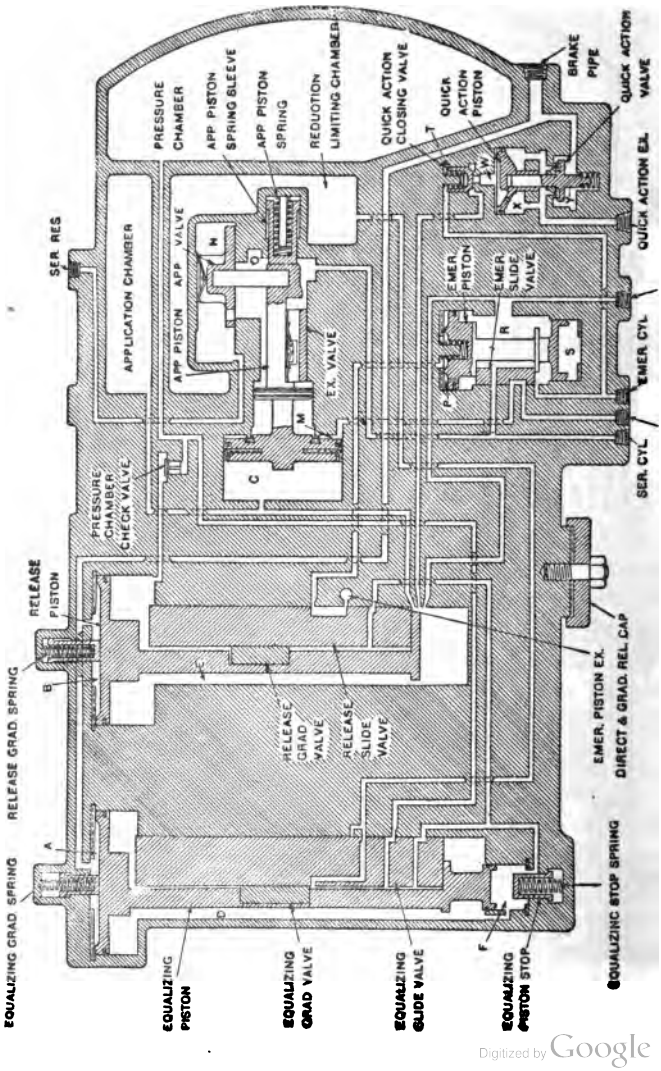

FIG. 144. EMERGENCY POSITION, QUICK ACTION VALVE CLOSED.

Digitized by Google

R to force the pistons and slide valve upward to the extreme position.

What connections are made by this movement of the emergency slide valve?

A. 1. Emergency reservoir is connected past the end of the slide valve with the emergency brake cylinder.

2. A port through the slide valve connects the emergency and service reservoirs so that their pressures become equalized in both brake cylinders.

3. A cavity in the slide valve connects chamber *M* between the large and small application pistons to the atmosphere at the emergency-cylinder exhaust. This last mentioned connection insures a quick and positive movement of the application piston and its valves to the application position.

Q. Are there any other connections made in emergency?

A. The *pressure chamber* is connected through the equalizing slide valve with chamber D and past the pressure chamber check valve with chamber *E;* also the *reduction-limiting chamber* is connected with chamber *D* through the equalizing slide valve.

Q. What is the purpose of these connections?

A. They perform no particular function except to insure pressure, acting on all slide valves so as to hold them to their seats and provide for the equalization of all chambers, reservoirs, etc.

Q. Do all parts of the control valve remain in the position just described throughout an emergency application?

A. No. The quick-action valve closes.

Q. How does this occur?

A. Since all reservoirs and cylinders become equalized in pressure, the pressures above and below the quick-action

Digitized by Google

closing valve become equal. This allows the spring to seat the quick-action closing valve. The pressure in chamber *W* then reduces by air flowing to the atmosphere through the small port in the quick-action piston, and the quick-action exhaust. This allows the spring under the quick-action valve to force both it and the piston upward till the valve is seated.

Q. What is the purpose of this closing of the quick-action valve?

A. It closes connection between the brake pipe and the quick-action exhaust so that when a release is made, the brake-pipe pressure will not escape to the atmosphere and interfere with the release.

Q. Do any other parts of the control valve change position in emergency?

A. No.

Q. In releasing after an emergency, how does the control valve operate?

A. Just the same as after any other application and as described under "Release and Recharging."

BRAKE CYLINDERS.

Q. What does Fig. 145 illustrate?

A. The type of brake cylinder used with the "PC" equipment.

Q. In what way does it differ from that used with previous equipments?

A. Only in the pressure head which does not have any seat for a triple valve, but is a plain, flat head except for the slack adjuster lug.

Q. Are both service and emergency brake cylinders just alike?

A. They are always the same type but not always the same size. Very often the emergency brake cylinder is one size smaller than the service cylinder.

Digitized by Google

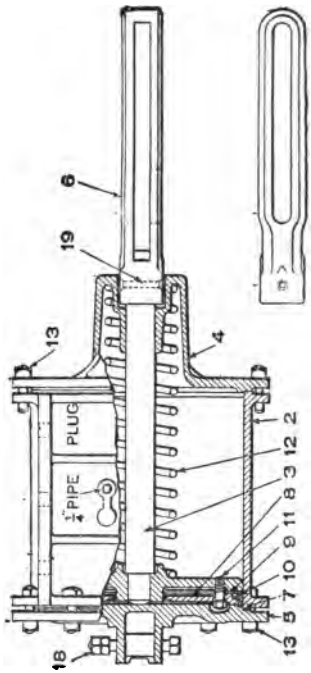

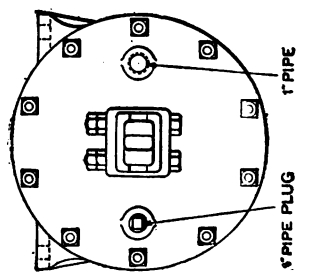

FIG. 145. BRAKE CYLINDER USED WITH THE PC BRAKE EQUIPMENT.

Digitized by Google

Q. What determines the size of each?

A. The weight of the car and the desired increase of emergency braking power over service. If the emergency should be twice that of the service, both cylinders are made the same size. Otherwise they are proportioned to give the desired relation between service and emergency.

Q. How are the cylinders placed on the car?

A. Directly opposite each so that the two sets of cylinder levers are symmetrical and connect by links of equal length to the same top rod at each end. (See Figs. 118 and 119.) Sometimes the cylinders point in the same direction, and sometimes in opposite directions; the latter is usually more convenient for hand-brake connection, while the former makes the slack-adjuster connections somewhat simpler. Which arrangement to use depends on the construction of the car and the location of the apparatus.

Q. Is the slack adjuster a regular part of this equipment?

A. No, but an automatic slack adjuster for each brake cylinder is considered as about essential to this equipment, and always should be included.

Q. How are the slack adjusters connected to the cylinder?

A. Both adjusters are connected to the service brake cylinder so that they will both always operate at the same time and an equal amount.

GENERAL.

Q. How should an engineer handle this brake?

A. Practically the same as with cars having the old quick-action brake.

Q. What noticeable difference exists?

A. An *over-reduction* will result in an emergency application if the reduction is continued below 60 pounds with

110-pound brake pipe, or 35 pounds with 70-pound brake pipe.

Q. What should be done to cut out this brake on a car whenever necessary?

A. Close the cut-out cock in the brake-pipe branch to the control valve, and bleed both reservoirs.

Q. Since both sets of cylinder levers are connected to the same pull rods, how does a service application affect the emergency cylinder?

A. The emergency cylinder lever will move exactly as the service cylinder lever, but as the emergency-cylinder piston rod is provided with a slotted crosshead, the movement of the piston rod end of the emergency-cylinder lever does not cause any movement of the piston in that cylinder.

Q. What important point should be noted from this fact?

A. That the emergency-cylinder piston being in release position does not necessarily indicate that the brakes are released. To actually determine this, look at the ends of either the service or emergency-cylinder levers.

Q. In adjusting the automatic slack adjusters, what is especially necessary to bear in mind?

A. That the crossheads of both adjusters must be left at the same distance from their respective cylinder heads, so that the piston travel of both cylinders in an emergency application will be the same.

Q. Where is the quick-action exhaust located?

A. It is the one-inch pipe tapped opening in the bottom of the control-valve reservoir.

Q. What should be done in the event of a continual blow at this opening?

A. Make an emergency application, then release; if the blow continues, the quick-action valve leaks, and the quick-action portion (on the left when facing the equalizing

Digitized by Google

portion) should be removed and replaced with one in proper condition.

Q. Where is the application-chamber exhaust?

A. It is the ⅜-inch pipe tapped opening on the left side of the control-valve reservoir.

Q. If a blow occurs at this opening, with brake either applied or released, what should be done?

A. A new or repaired equalizing portion should be substituted, as the release slide valve, or graduating valve, needs attention.

Q. Where is the reduction limiting chamber exhaust?

A. It is the ⅜-inch pipe tapped opening on the left-hand side of the equalizing portion.

Q. If a blow is heard at this exhaust in either release or service position, what does it indicate?

A. That the application portion is defective and should be replaced by a new, or repaired one.

Q. If the blow occurs only after a 30-pound brake-pipe reduction, what is indicated?

A. That the emergency-reservoir check valve is defective, and another should be substituted.

Q. Where is the emergency-reservoir check valve located?

A. It is the middle check valve in the equalizing portion.

Q. If this blow at the reduction-limiting chamber exhaust continues all the while, what is the trouble?

A. It indicates that the equalizing portion is defective and should be replaced.

Q. Where is the emergency-piston exhaust?

A. It is the ⅜-inch pipe tapped opening on the right-hand side of the equalizing portion.

Q. What should be done if a blow is heard at this exhaust opening?

A. Make a 15-pound reduction, and lap the brake-valve handle. If the blow stops, it indicates that either the emer-

gency piston or the seal on the small end of the equalizing piston is defective. If the blow continues, it indicates a defective equalizing portion. In either case another portion in good order should be substituted.

Q. Where is the service brake-cylinder exhaust located?

A. It is the ¾-inch pipe tapped opening on the left-hand side of the control-valve reservoir.

Q. What does a hard blow at this exhaust indicate?

A. If it occurs when the brakes are applied, it indicates a defective application portion; if when the brakes are released, it may be either the application portion or the emergency portion that is defective. In either case another portion should be substituted.

Q. Where is the emergency-cylinder exhaust?

A. It is the ½-inch pipe tapped opening on the bottom of the control-valve reservoir.

Q. What does a hard blow at this exhaust indicate?

A. It indicates a defective emergency portion, requiring the substitution of another in good order.

Q. If the changing of the portions does not eliminate the trouble what should be done?

A. Examine the gaskets between the portions to see if any defect exists in them.

Q. When removing the application, emergency, and quick-action portions, what should be done with the gaskets?

A. They should be left on the reservoir.

Q. When removing the equalizing portion, where should the gasket be left?

A. On the application portion, unless the latter is to be shipped to or from a repair point.

Q. What general rule should be observed in applying gaskets?

Digitized by Google

A. They should be carefully examined to see that no ports are restricted, or that the gasket is not broken or damaged between ports. See that the nuts are all tight so that a good bearing exists all around.

Q. Where is the direct and graduated-release cap located?

A. On the front of the equalizing portion in the center, held in place by a single stud.

Q. How should this cap be set?

A. With the pointer on the cap toward either the words "direct release" or "graduated release" (which are cast on the front of the portion) according to the instructions issued by the railroad.

LUBRICATION OF THE CONTROL VALVE.

Q. In lubricating the equalizing portion, what is the first thing to be done?

A. Carefully wipe off the bearing surfaces with a soft cloth, or some soft material without lint, thoroughly removing all oil, gum or grease from the slide valves and seats.

Q. What next should be done?

A. With a stick about 8 inches long, having a pad of chamois skin glued to one end, dip the chamois in a high grade of very fine dry (not flake) graphite, the best that can be obtained, and rub it on the face of the slide valves, graduating valves, their seats, and the upper part of the slide-valve bushing where the slide-valve spring bears; rub into the surfaces thoroughly so as to make as much as possible adhere and fill in the pores of the brass, leaving a very thin light coating of graphite on the seats.

Q. Should any oil or grease be used?

A. No. Care should be taken that no oil or grease comes in contact with the slide valves or their seats, and in hand-

Digitized by Google

ling, the fingers should not touch the lubricated surfaces, as moisture will tend to remove the graphite coating.

Q. How should the pistons be lubricated?

A. After replacing the pistons and slide valves in the equalizing portion, they should be moved to *release* position and a *little* good oil or graphite grease applied to the surfaces of the piston bushings. The pistons should then be moved back and forth several times to insure a proper distribution of the lubricant over the working surface. Any excess of lubricant should be removed with a cloth.

Q. How should the application portion be lubricated?

A. The slide valves and their seats should be cleaned and sparingly lubricated with graphite grease. The application piston and cylinder should be thoroughly cleaned and lubricated with graphite brake-cylinder lubricant.

Q. How should the emergency portion be lubricated?

A. 1. After thoroughly cleaning the bearing surfaces, remove the top cover and take out the loose fitting cylinder bushing.

2. Lubricate the large piston with a few drops of a good grade of triple-valve oil, applying same sparingly to the slide valve, then enter the latter into the portion.

3. Lubricate the slip bushing for the small emergency piston, applying a few drops of triple-valve oil to the inner circumference.

4. Apply the bushing to the portion and bolt on top cover.

5. Move the slide valve to *release* position and put a few drops of oil on the walls of the large cylinder bushing, moving back and forth several times to distribute the oil, and removing any excess with a cloth.

6. Apply the large cover to the emergency portion.

Q. What lubrication is required for the quick-action portion?

Digitized by Google

A. No parts of the quick-action portion require lubrication.

COMMON EXHAUST RESERVOIR.

Q. Is any part of the control valve ever furnished differently than just described? If so, what?

A. Yes, the three-compartment reservoir.

Q. In what way is it furnished differently?

A. There is a type of this reservoir called the "common exhaust" reservoir which has only one visible exhaust opening to the atmosphere.

Q. What is the object of this?

A. To protect the various exhaust openings from becoming closed by ice, snow, slush, or sand.

Q. How is this accomplished?

A. A *common-exhaust chamber* is cast around the reservoir into which all the exhaust openings are connected, then only one large opening is allowed between this chamber and the atmosphere. (See Fig. 146.)

Q. Is the common exhaust the only opening between the common-exhaust chamber and the atmosphere?

A. No, there is an opening opposite each regular exhaust to permit access to each exhaust separately if desired, but

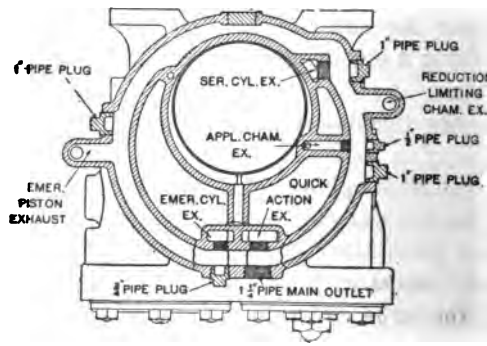

FIG. 146. SECTION THROUGH CONTROL VALVE RESERVOIR HAVING COMMON EXHAUST.

Digitized by Google

in ordinary service these openings are usually plugged, and the common exhaust piped to some protected place.

Q. In case of piping the common exhaust as just mentioned, which pipe-tapped opening should be used?

A. Any of the one-inch pipe-tapped openings on the sides or bottom, as most convenient.

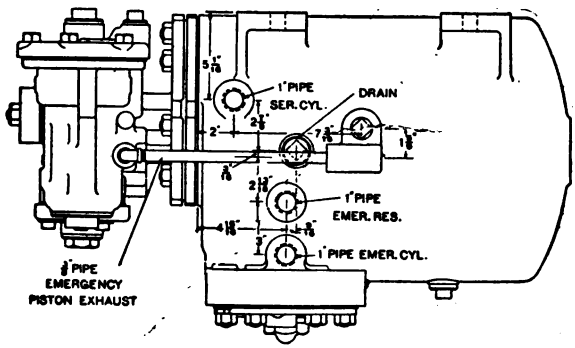

FIG. 147. CONTROL VALVE, COMMON EXHAUST RESERVOIR. SIDE VIEW.

Q. If no opening is piped away, which one is left open?

A. Usually several, so that if any one is closed, there will still be others through which the exhaust can pass.

Q. How are the two exhausts on the sides of the equalizing portion connected with the others?

A. By pieces of ⅜-inch pipe which connect into the common exhaust chamber. (See Figs. 147 and 148.)

Q. When testing for leakage, how is it possible to get at the various exhaust openings?

A. By removing the ⅜-inch pipes on the sides of the equalizing portion, and the plugs from the openings in the reservoir opposite to the other exhausts, inserting pipe nipples long enough to cause each exhaust to take place outside of the reservoir. Then proceed with the tests as already outlined.

Digitized by Google

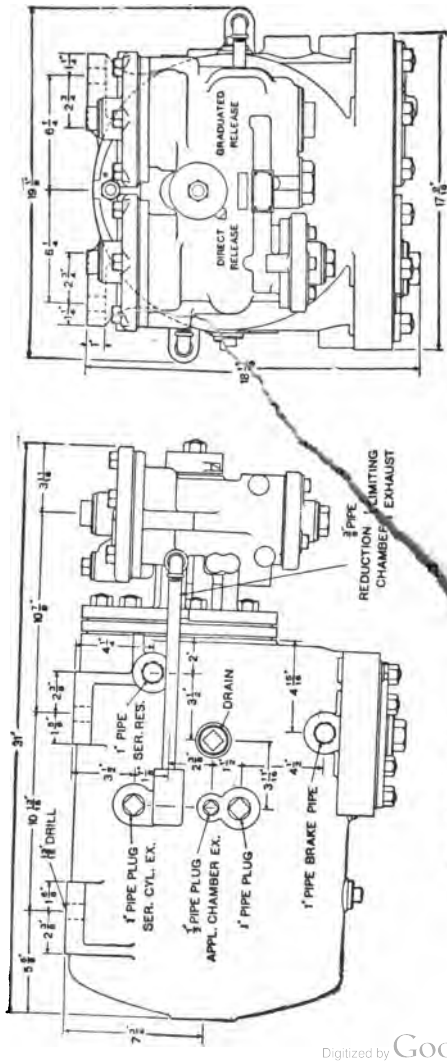

FIG. 148. CONTROL VALVE WITH COMMON EXHAUST RESERVOIR.

Digitized by Google

THE CENTRIFUGAL DIRT COLLECTOR.

Q. What is the centrifugal dirt collector?

A. It is a device to protect valves from dirt, sand, scale or any foreign matter carried along through the pipes by the flowing air.

Q. Where is it usually placed?

A. In the branch pipe from the brake pipe to triple valves, control valves or distributing valves.

Q. Is it used in conjunction with the brake-pipe air strainer, usually placed at the point where the branch pipe and brake pipe join?

A. No, the brake pipe air strainer is omitted when the centrifugal dirt collector is used, and a special *branch-pipe tee* substituted, which does not have any strainer in it, but is so designed as to prevent water in the brake pipe from running into the branch pipe.

Q. At what point in the branch pipe should the centrifugal dirt collector be installed?

A. Between the cut-out cock and the triple (or other) valve, and as close to the valve as practicable.

Q. In what position should it be placed?

A. Vertically with the pipe connections at the top, and so the air will flow through it toward the valve in the direction marked by the arrow cast on the outside of the body.

Q. How does it operate? (See Fig. 149).

A. The air entering the device on one side is made to rotate around the center, then pass up and out through the middle; in so doing, the dirt and foreign matter is thrown by centrifugal force against the walls of the conical chamber, and thence by gravity falls into the chamber at the bottom,

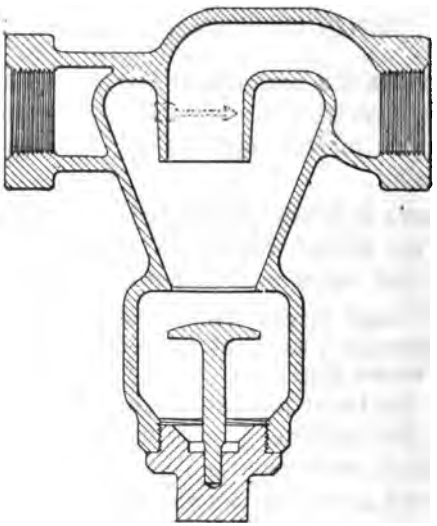

FIG. 149. CENTRIFUGAL DIRT COLLECTOR.

where the deflector which stands up from the plug at the bottom prevents its being drawn up into the outgoing stream of air.

Q. What is the particular advantage of this type of air cleaner?

A. It automatically eliminates the foreign matter without in any way reducing or restricting the air passage.

Q. How is the dirt removed from the collector?

A. By unscrewing the plug at the bottom.

Q. How often should the dirt collector be cleaned?

A. Every time the triple (or other) valve is cleaned.

Digitized by Google

INDEX

PAGE

ADJUSTMENT of PC equipment 397
Air brake and hand brake used together.....92 – 94
Air brake inventions...17, 18, 36
Air brake, plain automatic..18, 19
Air brake, quick action..... 19
Air brake, straight..... 17
Air brake, to apply..... 31
Air brake, to release..... 33
Air brake versus hand brake.. 333
Air brake, what it is..... 17
Air hose.....293–298
  Label.....294, 295
  Life of hose..... 294
  Porous hose..... 294
  Sizes..... 293
  Specifications for..... 295
Air pumps—see Pumps.
Air signal system.....261–273
  Air strainer..... 264
  Discharge valve, location.. 261
  Discharge valve, operation..... 262
  Flow of air in..... 266
  Parts on engine..... 261
  Parts on car..... 261
  Reducing valve, location.. 262
  Reducing valve, operation. 263
  Signal valve, location.... 262
  Signal valve, operation... 267
  Troubles and cures....269–273
  Whistle, location..... 265
American automatic slack adjuster.....94, 101
Application chamber exhaust of control valve, location of.. 398
Application portion of control valve..... 356
Automatic slack adjuster—see Slack Adjuster.
Auxiliary reservoir..... 81
Auxiliary reservoir, how charged.....28, 45, 68
Auxiliary reservoir, time to charge..... 33

BEGINNINGS of the air brake.. 17
Brake cylinders, PC equipment..... 394
Brake cylinder leakage groove. 80
Brake cylinder packing expander..... 79
Brake cylinder pipe choke fittings..... 232
Brake cylinder piston packing leather..... 79
Brake cylinder piston travel.. 83
Brake cylinder pressure.....84 – 87
Brake cylinder release spring.. 79
Brake equipment, PC passenger 349
Brake valves.
  Equalizing reservoir...167–170
    Capacity..... 170
  G-6 brake valve.....150–173

PAGE

Brake valves—continued.
  Operation..... 155
  Parts..... 152
  Positions..... 154
  Troubles and cures ..170–173
  Use..... 153
  H-6 automatic brake valve.....212–221
  S-6 independent brake valve.....221–228
  Slide valve feed valve..162–166
    Adjustment..... 165
  Operation..... 163
    Parts..... 166
    Straight air brake valve. 199
Brakes fail to apply..... 45
Braking power and leverage, 274–293
  Braking power, car light and car loaded..... 276
  Braking power, general rule for calculating..... 288
  Braking power, high speed brake.....178, 187
  Braking power, how determined..... 274
  Braking power on driving wheel brakes.....275, 290
  Braking power on engine truck and trailing wheels..... 275
  Braking power on freight car..... 274
  Braking power on passenger car..... 275
  Braking power on tenders. 275
  Cylinder pressure, different sizes..... 277
  Cylinder pressure used in figuring braking power. 276
  Cylinder sizes for different weights of cars..... 290
  Hodge system of levers, 283, 287
  Lever of first class..... 278
  Lever of second class..... 279
  Lever of third class..... 280
  Levers, three classes of... 278
  Steven's system of levers.. 287
  Tender brake levers..... 287
Broken graduating spring, effect of..... 47

CAM, brake..... 292
Centrifugal dirt collector..... 405
  Advantage of..... 406
  Cleaning of..... 406
  Operation of..... 405
  Position..... 405
  Purpose..... 405
Check valve in triple valve, use of..... 40
Choke fittings, brake cylinder pipe..... 232

Digitized by Google

PAGE
Combined automatic and straight air engine and tender brake equipment.193–205
Double check valve..... 196
Handling..... 197
Parts of..... 195
Purpose of..... 193
Straight air brake valve.. 199
Connections..... 202
Location..... 201
Operation..... 202
Parts..... 200
Positions of handle..... 201
Troubles and cures..... 204
Common exhaust reservoir for control valve..... 402
Compartment reservoir of control valve..... 355
Control valve, No. 3-E..... 355
Application chamber exhaust..... 398
Application of gaskets.... 399
Application portion..... 356
Common exhaust reservoir 402
Emergency cylinder exhaust..... 399
Emergency piston exhaust 398
Emergency position..... 390
Emergency portion..... 356
Emergency reservoir check valve..... 398
Emergency slide valve and seat..... 364
Equalizing portion..... 355
Equalizing slide valve and seat..... 362
Full service position..... 375
Graduated release cap.... 400
Graduated release lap position..... 386
Graduated release positon 384
Lubrication of..... 400
Names of parts..... 359
Normal position..... 365
Outline..... 358
Over-reduction lap position..... 377
Over-reduction position.. 377
Parts of..... 355
Port connections..... 364
Quick action exhaust..... 397
Quick action portion..... 356
Reduction limiting chamber exhaust..... 398
Release and charging position..... 365
Release position..... 381
Release slide valve and seat 363
Service brake cylinder exhaust..... 399
Service lap position..... 375
Service position..... 372
Cutting out of PC equipment. 397
Cut-out cock, main reservoir.. 255
Cylinder cap, quick-action.247–250
Cylinder levers..... 83
Cylinder pressure..... 84

PAGE
Cylinder pressure, emergency type "L" triple valve..... 76

"DEAD" lever..... 83
Discharge valve—see Air Signal System
Distributing valve.....228–251
Double check valve..... 196
Double pressure control equipment.....189–193
Advantages of..... 189
Benefits of..... 191
Object of..... 189
Duplex Main-Reservoir Regulation.....174–177
Benefits of..... 176
Connections..... 174
Object..... 174

ET locomotive brake equipment.....206–260
Advantages of..... 208
Defects of.....255–258
Leaky application cylinder pipe..... 255
Leaky application piston..... 257
Leaky application valve 256
Leaky distributing-valve release pipe..... 255
Leaky equalizing slide valve..... 257
Leaky graduating valve 258
Leaky rotary valves.... 256
Differences between No. 5 and No. 6 equipments.....258–260
Feed valves.....251–253
B-6 feed valve..... 251
C-6 feed valve..... 253
H-6 automatic brake valve.....212–221
Comparison with G-6 valve..... 215
Connections..... 217
Lubrication..... 220
Operation..... 218
Parts..... 217
Positions of handle..... 213
Necessity of..... 207
No. 6 distributing valve,228–251
Automatic release..... 244
Connections..... 228
Emergency application. 245
Functions of..... 229
Independent application 240
Independent release.... 242
Independent release after automatic application 246
Names of parts.....234–238
Service application..... 243
Principal parts.....208–212
Pump governor.....253–255
Connections..... 253
Operation..... 254
Quick action cylinder cap, 247–250

Digitized by Google

PAGE
ET locomotive brake equipment —continued.
Operation..... 249
Parts..... 249
Purpose..... 247
When used..... 248
Safety valve, use of..... 250
Operation..... 250
Parts..... 250
S-6 independent brake valve.....221–228
Connections 222
Handling..... 225
Operation.....223, 226
Parts..... 221
Positions of handle..... 223
Emergency cylinder exhaust of control valve, location of... 399
Emergency piston exhaust of control valve, location of... 398
Emergency piston, triple valve, use of..... 40
Emergency portion of control valve..... 356
Emergency position of control valve..... 390
Emergency reservoir check valve of control valve, location of..... 398
Emergency slide valve and seat 364
Emergency valve, triple valve, use of..... 40
Engineer's brake valve—See Brake Valves.
Equalizing piston—see Brake Valves.
Equalizing portion of control valve..... 355
Equalizing reservoir—see Brake Valves.
Equalizing slide valve and seat. 362
Expander ring, brake cylinder. 79

FAILURE of brakes to apply.. 45
Feed valve—see Brake Valves and ET Equipment.
First form of air brake..... 17
Floating lever..... 83
Formulæ and rules.....344–348
Freight brake equipments, sizes of..... 83
Freight equipment..... 79
Frozen triple valves..... 46
Full service application.32, 55, 185
Full service position of control valve..... 375
Functions of the triple valve in the operation of the brake.. 28

G-6 BRAKE valve.....150–173
Gages, recording.....306–309
Gaskets, application of, to control valve..... 399
Governors — see Pump Governors.
Graduated release cap of control valve, location of..... 400

PAGE
Graduated release lap position of control valve..... 386
Graduated release position of control valve..... 384
Graduating spring broken, effect of..... 47
Graduating stem and spring, use of in triple valve..... 24
Graduating valve, duty of.... 25

HAND brake, and air brake used together.....92–94
Handling of PC equipment... 396
Handling, train.....318–341
High speed brake (old style), 178–188
Arrangement on engines.. 181
Braking power.....178, 187
Cleaning and oiling..... 187
Handling..... 185
Length of stops with..... 188
Necessity for..... 178
Pressures carried..... 179
Reducing valve..... 179
Hodge lever..... 83
Hose—see Air Hose.

INDEPENDENT brake valve.221, 228
Inspection, train.....310–318
Invention of air brake..17, 18, 36

"K" TYPE of triple valve..... 53

"L" TYPE of triple valve..... 64
Leakage groove, brake cylinder 80
Leaky valves in triple valve, effect of..... 50
Leather, piston packing brake cylinder..... 79
Leverage—see Braking Power and Leverage.
Levers—see Braking Power and Leverage.
Little drum—see Brake Valves.
"Live" lever..... 83
Lubricants..... 306
Lubrication of control valve.. 400

MAIN reservoir.....146–150
Capacity recommended... 146
Cooling, pipe..... 149
Effects of small reservoir capacity..... 147
Location..... 148
Object of..... 146
Water found in..... 149
Main reservoir cut-out cock... 255

NORMAL position of control valve..... 365

OVER-reduction lap position of control valve..... 377
Over reduction position of control valve..... 377

Digitized by Google

PAGE

PC PASSENGER brake equipment..... 349
Adjustment..... 397
Cutting out of..... 397
Handling of..... 396
How the features are obtained.....351–355
Names of parts..... 351
Necessity of..... 349
Novel features of..... 350
Use of..... 349
Peculiarities and troubles of quick-action triple valve.... 44
"Pipeless" triple valve..... 67
Piping.....339–343
Piston, triple valve, duties of.. 24
Piston, packing leather. brake cylinder..... 79
Piston travel..... 83
Determination of..... 90
Effect on train handling, 87, 88, 89
Variation in..... 91
Plain automatic brake..... 18
Plain triple valve..... 21
Application position..... 29
Emergency position..... 35
Lap position..... 31
Parts of..... 22
Release position..... 33
Where used..... 35
Port connections of control valve..... 364
Pressure retaining valves..101–112
Connections..... 102
Cylinder pressure with.107–109
Different sizes.....111, 112
Double-pressure retainer. 104
Location..... 102
Manipulation.....106, 107
Operation..... 103
Positions of handle..... 102
Size of small vent part.. 104
Testing..... 106
Troubles with..... 106
Use..... 102
With what equipments used..... 101
Pumps.....113–138
Connections..... 116
Cross compound pump, 129–138
Air valves..... 134
Capacity..... 137
Intermediate air pressure..... 137
Main valve..... 134
Operation.....135, 136
Size of cylinders..... 131
Speed..... 138
Steam consumption.... 130
Dry pipe..... 113
11-inch pump.....128, 129
9½-inch pump.....116–128
Capacity..... 119
Lubrication..... 120
Operation.....117, 118

PAGE

Pumps—Continued.
Packing..... 119
Right and left hand.... 126
Starting..... 120
Troubles and cures.121–126
Location..... 116
Sizes..... 113
Use..... 113
Pump governors.....139–145
Closed drip pipe..... 141
Dirty or gummed pin valve..... 142
Operation..... 141
SF-4 pump governor..... 143

QUICK action automatic brake, 18, 79
Quick action cylinder cap..247–250
Quick action exhaust of control valve, location of..... 397
Quick action portion of control valve..... 356
Quick action triple valve..... 36
Emergency position..... 40
Parts of..... 41
Peculiarities and troubles. 44
Quick action undesired..... 47

RECORDING gages.....306–309
Connections..... 307
Speed..... 308
Use..... 307
Reducing valve—see Air Signal System.
Reducing valve—see High Speed Brake.
Reduction limiting chamber exhaust of control valve, location of..... 398
Release and charging position of control valve..... 368
Release position of control valve..... 381
Release slide valve and seat of control valve..... 363
Release spring brake cylinder. 79
Release valve, auxiliary reservoir..... 81
Retaining valves—see Pressure Retaining Valves.
Rules and formulæ.....344–348
Running piston travel.....90, 99

SAFETY valves.....192, 250
Service brake cylinder exhaust of control valve, location of. 399
Service lap position of control valve.....375
Service position of control valve..... 372
Signal system—see Air Signal System.
Signal valve—see Air Signal System.
Slack adjuster.....91, 94–101
Amount of take up..... 98
Cleaning and lubrication. 101

Digitized by Google

PAGE
Slack adjuster—continued.
How to apply new shoes. 99
Length of cylinder lever rod..... 100
Parts of..... 96
Piston travel too short... 100
Piston travel too long.... 100
Stuck..... 101
Slide valve, triple valve, duties of..... 27
Slide valve spring, triple valve 28
Standing piston travel.....90, 99
Strainer, triple valve, use of, 40, 77
Straight air brake, why unsatisfactory..... 18
Straight-air brake valve..... 199
Supplementary reservoir..... 66
Sweeney compressor..... 299

THREE-WAY cock.....17, 150
Triple valve, effect of brake-pipe reduction on.....29, 69
Triple valve, "pipeless type".. 67
Triple valve, plain..... 21
Application position..... 29
Emergency position..... 35
Lap position..... 31
Parts of..... 22
Release position..... 33
Triple valve quick-action..... 36
Emergency position..... 40
Parts of..... 41
Triple valve, type "K"..... 53
Emergency position..... 62
Lap position..... 59
Parts of..... 56
Release position..... 56
Retarded release position. 60
Service position..... 58
Sizes of..... 63

PAGE
Triple valve, type "L"..... 64
Emergency cylinder pressure..... 76
Emergency position..... 75
Full service position..... 73
Graduated release position 74
Quick-service position.... 69
Release lap position..... 74
Release position..... 73
Service lap position..... 71
Vent valve, duties of..... 77
Triple valve, why so called.... 28
Triple valve, graduating stem and spring, use of..... 24
Triple valve graduating valve, duty of..... 25
Triple valve piston, duties of.. 24
Triple valve slide valve, duties of..... 27
Triple valve slide valve spring. 28
Triple valve strainer, use of... 40
Triple valve with leaky valves, effect of..... 50
Triple valves..... 21
Triple valves, freezing of..... 46
Train handling.....318–341
Train inspection.....310–318

UNDESIRED quick action..... 47

VENT valve, type "L" triple valve, duties of..... 77

WHISTLE—see Air Signal System.
Water brake.....299–306
Compound engines (Baldwin)..... 304
Simple engines..... 300

Digitized by Google

Digitized by Google

PRACTICAL

RAILROAD BOOKS

RELATING TO

Air Brakes — Accidents — Boilers — Breakdowns — Combustion — Link Motion—Locomotives—Train Rules, Walschaert Valve Gears, Etc.

Published By
THE NORMAN W. HENLEY PUBLISHING CO.
132 NASSAU STREET
NEW YORK

Digitized by Google

20th REVISED EDITION. JUST PUBLISHED.

UP-TO-DATE

AIR-BRAKE CATECHISM

By ROBERT H. BLACKALL

Pocket Size
384 Pages.

Price, $2.00

Fully Illustrated
With Colored Plates.

THIS is the standard book on the Air Brake, written by one of the most widely known Air Brake Men in the United States, Canada and Mexico.

It is the only practical and complete work published. Treats on the equipment manufactured by the Westinghouse Air Brake Company, including the E-T Locomotive Brake Equipment, the K (Quick-Service) Triple Valve for freight service; the L High Speed Triple Valve; the P-C Passenger Brake Equipment, and the Cross Compound Pump.

The operation of all parts of the apparatus is explained in detail and a practical way of locating their peculiarities and remedying their defects is given,

If you are preparing for an examination, you should secure a copy of book at once, as it contains over

2,500 QUESTIONS WITH THEIR ANSWERS

This is the only book which has been endorsed and used by Air-Brake Instructors and Examiners on the different roads throughout the United States.

CONTAINING CHAPTERS ON

I.—BEGINNINGS OF THE AIR BRAKE.
II.—THE WESTINGHOUSE TRIPLE VALVES.
III.—WESTINGHOUSE FREIGHT EQUIPMENT.
IV.—WESTINGHOUSE AIR PUMPS.
V.—MAIN RESERVOIR.
VI.—WESTINGHOUSE OLD-STYLE HIGH-SPEED BRAKE.
VII.—No. 6 E-T LOCOMOTIVE BRAKE EQUIPMENT.
VIII.—AIR SIGNAL SYSTEM.
IX.—BRAKING POWER AND LEVERAGE.
X.—THE SWEENEY COMPRESSOR.
XI.—TRAIN INSPECTION.
XII.—FORMULAE AND RULES FOR AIR BRAKS INSPECTORS.
XIII.—THE "P-C" PASSENGER BRAKE EQUIPMENT.

Remember that this Book gives full and latest information on the old as well as the latest Air Brake Equipment.

Digitized by Google

JUST PUBLISHED NEW POCKET EDITION

WESTINGHOUSE E-T AIR BRAKE INSTRUCTION POCKET-BOOK

By WM. W. WOOD, Air Brake Instructor

PRICE $1.50

CONTAINS examination questions and answers on the E-T equipment. Covering what the E-T Brake IS. How it should be OPERATED. What to do when DEFECTIVE. Not a question can be asked of the ENGINEMAN UP FOR PROMOTION on either the No. 5 or the No. 6 E-T equipment that is not asked and ANSWERED in the book. If you want to thoroughly understand the E-T equipment get a copy of this book. It covers every detail. Makes Air Brake troubles and examinations easy.

AMONG THE CONTENTS OF THIS BOOK ARE:

The No. 6 E-T Equipment—the Valve—the Piping—the Gauges. The theory of the Triple Valve, and its principle in application to the E-T Locomotive Brake. The Distributing Valve—Colored Charts showing each and every phase of its action accompanied by Colored Piping Diagrams indicating the contained pressures. Theory of the Quick-Action Triple Valves, its Importance—its Principle in Application to the Quick-Action Distributing Valve of the No. 6 type. The E-6 Safety Valve. The H-6 Automatic Brake Valve—theory and principle of the automatically acting brake-pipe pressure Equalizing Discharge Valve Construction of the H-6 Brake Valve. Transparency Plates in Color Tints showing the Rotary Valve, and through it the Rotary Valve Seat, Ports, etc., in each Operative position of the Brake Valve Handle. The S-6 Independent Brake Valve—Its Construction. Transparency Plates similar to those of the H-6 Brake Valve, showing the arrangement of Ports in Rotary Valve and Seat in each position. The Double-Pressure, B-6 Feed Valve. The Duplex automatically controlled Excess and Maximum Pressure Pump Governor. The C-6 Reducing Valve. The "Dead Engine Feature" of the No. 6 E-T Equipment. Combined Air Strainer and Check Valve—its application to the Train Air Signal System.

Operation of the No. 6 E-T Locomotive Brake—Freight Service—Passenger Service—Switching Service—General Braking Service—Grade Work, etc. Reporting Work on the No. 6 Equipment. Testing the Equipment. Leaking or Broken Pipes of No. 6 Equipment.

The No. 5 E-T Locomotive Brake Equipment Its distinctive features as compared with the No. 6 Type—Its Operation—Leaking or Broken Pipes in the No. 5 Equipment.

Filled with Colored Plates—Showing various Pressures

Digitized by Google

REVISED 1916 POCKET EDITION

LOCOMOTIVE BREAKDOWNS AND THEIR REMEDIES

By GEO. L. FOWLER, revised by WM. W. WOOD, Air Brake Instructor

270 Pages **PRICE $1.00** Fully Illustrated

ENGINEERS are paid nowadays for getting their engines into the terminal on time, and to accomplish this there must be no casualties EN ROUTE that will cause delay; accidents, however, will happen, and it is the knowledge of HOW TO AVOID DELAY IN CASE OF ACCIDENTS that the Company requires of engineers nowadays, and what to do in case of breakdowns. The revised pocket edition of "Locomotive Brakedowns" is absolutely necessary to every engineer, fireman, and shop man, because it treats of every possible engine trouble, and presents the remedy, in the form of questions and answers. Just imagine all the common troubles that an engineer may expect to happen sometime, and then add all of the unexpected ones, troubles that could occur, but that you had never thought about, and you will find that they are all here, in this Up-to-Date Edition of "Breakdowns," with the very best methods of repair.

CONTENTS

I.—Defective Valves; II.—Accidents to the Valve Motion; III.—Accidents to Cylinders, Steam Chests, Cylinders and Pistons; IV.—Accidents to Guides, Crossheads and Rods; V.—The Walschaert Valve Motion; The Baker-Pillord Improved Valve Gear; Accidents that May Happen to these Gears; VI.—Accidents to Running Gears; VII.—Truck and Frame Accidents; VIII. Boiler Troubles; IX.—Defective Throttle and Steam Connections; X. Defective Draft Appliances; XI.—Pump and Injector Troubles; XII.—Accidents to Cab Fixtures; XIII.—Tender Accidents; XIV. Miscellaneous Accidents: XV.—Compound Locomotive Accidents; XVI.—Tools and Appliances for Making Engine Repairs; XVII.—Air Brake Troubles; XVIII.—The Pyle-National Electric Headlight.

Digitized by Google

JUST PUBLISHED

THIRD EDITION, REVISED AND ENLARGED

THE WALSCHAERT and OTHER MODERN RADIAL VALVE GEARS FOR LOCOMOTIVES

By WM. W. WOOD, Air Brake Inspector

245 Pages **PRICE, $1.50** FULLY ILLUSTRATED

WITH the adoption of the Walschaert Valve Gear on nearly every modern locomotive in America, this book fills a place of real interest and usefulness. By a careful study of its pages, one can THOROUGHLY understand the Walschaert Valve Gear, as the author takes the plainest form of a steam engine—a stationary engine—in the rough, that will only turn its crank in one direction—and from it builds up—with the reader's help, a modern locomotive equipped with the Walschaert Valve Gear, complete.

THE CONTENTS OF THE BOOK ARE DIVIDED INTO FIVE PARTS

THE FIRST DIVISION contains an analysis of the Walschaert Valve Gear.

THE SECOND DIVISION treats on the Designing and Erecting of the Valve Gear.

THE THIRD DIVISION has to do with the actual work of the Walschaert Valve Gear on the Road.

THE FOURTH DIVISION is composed entirely of questions and answers on the Walschaert Valve Gear.

THE FIFTH DIVISION deals with the Setting of Valves with the Walschaert Gear, the Hobart-Allfree Valve and Valve Gear, and the Baker-Pilloid Valve Gear in its original and improved form.

The book is fully illustrated, and a novel and interesting feature of the book is the folding diagrams with cardboard valve models, by means of which the actual operation of the valve under the influence of the Walschaert motion can be studied.

Digitized by Google

NEW EDITION JUST PUBLISHED

LOCOMOTIVE CATECHISM

By ROBERT GRIMSHAW, M. E.

825 Pages 437 Illustrations and Three Folding Plates

PRICE $2.50

THIS book commends itself an once to every Engineer and Fireman, and to all who are going in for examination, or promotion.

In plain language, with full, complete answers, not only all the questions asked by the examining engineer are given, but those which the young and less experienced would ask the veteran, and which old hands ask as "stickers."

It is a veritable Encyclopædia of the Locomotive, is entirely free from mathematics, and thoroughly up-to-date. Study it and you will know your engine thoroughly.

CONTAINS OVER 4000 EXAMINATION QUESTIONS WITH THEIR ANSWERS.

AMONG SOME OF THE SUBJECTS TREATED ARE:

Accidents and Emergencies; Air-Brakes; Alfree-Hubbell Gear; Allen Gear; Automatic Reducing Valve; Automatic Slack Adjuster; Auxiliary Reservoir; Blower; Boilers; Brake Cylinder; Cab; Check Valve; Collisions; Combustion; Compound Locomotives; Crosshead and Guides; Cut-off and Expansion; Cylinder; Derailment; Eccentric Motion; Eccentric Rods; Electric Headlight; Engine and Tender Brakes; Engineman's Tender Valve; Equalizing Bars; Examination of Firemen; Firing; Firing with Oil; Four-Cylinder Compounds; Gears; Gooch Gear; Headlight; Indicator; Injector; Joy Gear; K Tripple Valve; Knocks and Pounds; Lubrication; Piston Valves; "Quick-Action" Brake; Relief Valves; Richmond-Mellin Compound; Slide Valve; Slide-Valve Feed Valve; Superheated Steam; Sweeney Compressor; Tandem Compounds; Three-Cylinder Compounds; Vacuum Brake; Valve Gears; Valve Motion Models; Valve Setting; Walschaert Gear; Young Valve Gear.

Digitized by Google

JUST PUBLISHED!

PRACTICAL INSTRUCTOR AND REFERENCE BOOK FOR LOCOMOTIVE FIREMEN AND ENGINEERS

By CHARLES F. LOCKHART

368 Pages. **PRICE, $1.50** 88 Illustrations.

THIS book treats in a thorough manner of the rail road man's duties and how to properly perform them. It also contains practical information on: The Construction and Operation of Locomotives; Breakdowns and Their Remedies; Air Brakes and Valve Gears. Rules and Signals are handled in a thorough manner. As a book of reference it cannot be excelled.

An entirely new book on the Locomotive. It appeals to every rail road man, as it tells him how things are done and the right way to do them. Written by a man who has had years of practical experience in locomotive shops and on the road firing and running. The information given in this book cannot be found in any other similar treatise. Eight hundred and fifty-one questions with their answers are included which will prove specially helpful to those preparing for examination.

THE BOOK IS DIVIDED INTO SIX PARTS, AS FOLLOWS:

Part I.—THE FIREMAN'S DUTIES.
Part II.—GENERAL DESCRIPTION of the LOCOMOTIVE.
Part III.—BREAKDOWNS AND THEIR REMEDIES.
Part IV.—AIR BRAKES.
Part V.—EXTRACTS FROM STANDARD RULES.
Part VI.—QUESTIONS FOR EXAMINATION.

Digitized by Google

JUST OFF THE PRESS. POCKET EDITION.

TRAIN RULE EXAMINATIONS MADE EASY

By G. E. COLLINGWOOD

256 Pages—Fully Illustrated with Train Signals in colors

PRICE $1.25

THIS is a book which every railroad man, no matter what department he is in, should have, as it is written by a man who understands the subject thoroughly. Mr. G. E. Collingwood, the author, is a recognized authority on train rules and train orders. For years he has edited the train rule department in four of the foremost railroad magazines in the United States. If you want to thoroughly understand the subject get a copy of this book, as every detail is covered, and puzzling points are explained in simple, comprehensive language. This book is the only practical work on train rules in print.

Contains complete and reliable information of the Standard Code of Train Rules for single track. Shows Signals in Colors, as used on the different roads. Explains fully the practical application of train orders, giving a clear and definite understanding of all orders which may be used. The meaning and necessity for certain rules is explained in such a manner that the student may know beyond a doubt the rights conferred under any orders he may receive or the action required by certain rules.

Nearly 500 Questions with their Answers are Included

AMONG THE SUBJECTS TREATED ARE

The American Railway Association; Standard Time; Dividing points between the Time Sections; Personal Admonition; Definitions of Terms used; Time-Tables; Signals; Use of Signals; Superiority of Trains; Movement of Trains; Train Orders; Forms of Orders; Combinations of Orders; Clearance Cards; Train Identification; Examination Questions; Answers to Examination Questions; Standard Code of Train Rules for Single Track; Diagrams of Hand, Flag and Lamp Signals in Colors, etc.

Digitized by Google

JUST PUBLISHED

DIARY OF A ROUND HOUSE FOREMAN

By T. S. REILLY

Late Associate Editor "Railway Review."

176 PAGES PRICE $1.00

THIS is the Greatest Book of Railroad Experiences ever published. Containing a fund of information and suggestions along the line of handling men, organizing, etc., that one cannot afford to miss. Railroad men in any capacity will thoroughly enjoy and appreciate the valuable hints and funny experiences contained between the covers of this book. It will at once find a permanent place in the library of all who want to get ahead, as well as those who have climbed the ladder and enjoy looking back to the characters and times found only on a railroad.

New stories and laughable experiences are told, as can only be done, by one filled with the sense of Irish humor and the power of imparting in writing the humorous incidents connected with the knotty problems involved in every day life of a round-house foreman.

While most of the suggestions are specifically connected with the duties of a round-house foreman, many of the stories are, in reality, part of Mr. Reilly's life, obtained while holding positions of Machinist, Round-House Foreman, Fireman, Engineer, Master Mechanic and Superintendent of Motive Power.

These articles first appeared serially in the "Railway Review" and are now put in book form, on account of the continued requests from readers for them. The author, a jolly fellow liked by all, had the faculty of seeing a thread of fun in the most serious of complications.

An Interesting Book for Every Railroad Man to Read and Profit By.

Digitized by Google

A CATECHISM ON THE

COMBUSTION OF COAL

AND THE PREVENTION OF SMOKE

By WILLIAM M. BARR., M. E.

Nearly 350 Pages **PRICE $1.00** Fully Illustrated

A PRACTICAL TREATISE FOR

Engineers, Firemen and all others interested in Fuel Economy.

TO be a success a fireman must be "Light on Coal." He must keep his fire in good condition, and prevent, as far as possible, the smoke nuisance. To do this, he should know how coal burns, how smoke is formed and the proper burning of fuel to obtain the best results. He can learn this, and more too, from Barr's "COMBUSTION OF COAL AND THE PREVENTION OF SMOKE." It is an absolute authority.

Contains nearly 500 questions with their answers, giving the needed information to enable anyone to pass any examination on combustion.

AMONG THE SUBJECTS TREATED ARE

Locomotive Furnace Details. Limitations of Locomotive Fire-Box. Advantages of large Grate Area. Rate of Combustion in Locomotive Boilers. Function of Fire-Brick Arch in Locomotive Fire-Boxes. Usual Construction of Brick Arch in Locomotive Fire-Boxes. Does the Brick Arch in Locomotive Fire-Boxes cause leaky Flues? Tubular Water Grates. Stationary Coal Burning Grate. Shaking Grate. Comparison of Evaporated Power of Anthracite and Bituminuous Coal in Locomotive Practice. Practical results of single shovel Firing on the B. C. R. and N. Ry. Saving in Coal by light Firing in Locomotives. The best Method of Firing a Locomotive. Noticeable improvements in Connection with light Firing and Boiler Repairs. Direct saving upon the Brick Arches in Locomotive Fire-Boxes by Light Firing. Advantages attained by the lateral extension of Locomotive Fire-Boxes. Disadvantages of a wide Fire-Box in Locomotives. Division of wide Fire-Box in Locomotives into two separate Furnaces Evaporative results in ordinary Locomotive Practice. Most efficient form of Exhaust Tip. Size of average Exhaust Tips. Conclusions reached regarding means for increase in Production of Steam by Increased Draft. Strong's Locomotive Fire-Box. How the Smokeless Combustion of Bituminuous Coal is carried out in Pratice in Locomotives. Details of front ends of Locomotives So. Pac. Ry. Furnace Door Details. Details of Shaking Grate. Details of Ash Pan. Facts given in daily report of Traveling Firemen So. Pac. Ry.

Hydrocarbon Oil as a Fuel for Locomotives. Heating Power of Crude Petroleum. Success attending the use of Liquid Fuel as Auxiliary to Coal for Locomotive Engines. Changes necessary to Convert a Coal into an Oil-Burning Locomotive. Construction of Atomizers for Burning Oil on So. Cal. Railroad. How Oil is supplied to Burner under Pressure. Size of Exhaust nozzle when burning Oil. Are Oil Fires Smokeless? Effect of Products of Combustion of an Oil Fire upon the Tubes of a Boiler. Relative cost of Oil and Coal as a Fuel in Locomotive Practice.

Digitized by Google

JUST ISSUED NEW REVISED EDITION

LOCOMOTIVE BOILER CONSTRUCTION

By FRANK A. KLEINHANS

478 Pages
350 Illustrations

PRICE, $3.00

Five Folding Plates

THIS IS ONE OF THE BEST BOOKS OF ITS KIND EVER PUBLISHED. IT TAKES THE READER FROM THE LAYING OUT OF THE SHEETS TO THE COMPLETED BOILER. THERE ISN'T A MAN WHO HAS ANYTHING TO DO WITH BOILER WORK, EITHER NEW OR REPAIR WORK, WHO DOESN'T NEED THIS BOOK. THE MANUFACTURER, SUPERINTENDENT, FOREMAN, AND BOILER WORKER—ALL NEED IT. NO MATTER WHAT THE TYPE OF BOILER, YOU'LL FIND A MINT OF INFORMATION THAT YOU WOULDN'T BE WITHOUT.

THIS book takes the locomotive boiler up in the order in which its various parts go through the shop. Each step, from the first mark on the sheet to the finished boiler, receives careful attention in a thoroughly practical way, shows all types of boilers used; gives details of construction; practical facts, such as life of riveting, punches and dies; work done per day, allowance for bending and flanging sheets, and other data. Including the recent Locomotive Boiler Inspection Laws and Examination Questions with their answers for Government Inspectors.

CONTENTS.

Laying Out Work—Flanging and Forging, Punching, Shearing and Plate Planning—Bending—Machining Parts—Boiler Details—Assembling and Calking, Finishing Parts, Boiler Shop Machinery—General Tables—Plates Showing Types of Modern Locomotive Boilers—Locomotive Boiler Inspection—Questions and Answers on Boiler Inspection.

Digitized by Google

JUST ISSUED. 3RD REVISED & ENLARGED EDITION.

LINK MOTIONS, VALVES AND VALVE SETTING

By FRED H. COLVIN

FULLY ILLUSTRATED PRICE, 50c.

A HANDY book for the engineer or machinist that clears up the mysteries of valve setting. Shows the different valve gears in use. how they work, and why. Piston and side valves of different types are illustrated and explained. A book that every rail road man in the motive power department ought to have.

CONTAINS CHAPTERS ON

Locomotive Link Motion.—Direct and Indirect Motion; lap; lead; crossed rods, etc.

Valve Movements.—Twelve charts showing complete movements of valves under various conditions of travel; lap and lead.

Setting Slide Valve.—Finding dead centers; increasing or decreasing leads; changing length of eccentric rods or blades; moving eccentrics on axle.

Analysis by Diagrams.—Illustrates the various conditions that occur with direct or indirect motion; inside and outside admission and different methods of connecting the link. New facts and rules in connection with link motions and valve setting.

Modern Practice.—Shows what is being done in the matter of eccentric rod lengths; angularity of eccentric rods; leads; proportions of travel; eccentric throw; lap; ports; piston speed, etc.

Slip of Block.—Illustrates how and why "Slip" exists and how it is hardly considered in modern practice.

Slide Valves.—Shows balanced D Valve, Allen Valve and Wilson's American Valve.

Piston Valves.—Shows eight varieties of piston valves; two styles of valve bushings or cages and device for getting water out of cylinder. Gives experience of several roads with piston valves.

Setting Piston Valves.—Plain directions on points differing from slide valves.

Other Valve Gears.—Joy-Allen, Walschaert, Gooch, Allfree-Hubbell, The Baker, and Southern. Illustrated.

Digitized by Google

SIXTH EDITION JUST PUBLISHED

MACHINE SHOP ARITHMETIC

By COLVIN-CHENEY

145 Pages **Price, 50c.** Bound in Cloth

THIS is an arithmetic of the things you have to do with daily. It tells you plainly about: how to find areas of figures—how to find surface or volume of balls or spheres—handy ways for calculating—about compound gearing—cutting screw threads on any lathe—drilling for taps—speeds of drills, taps, emery wheels, grindstones, milling cutters, etc.—all about the Metric system with conversion tables—properties of metals—strength of bolts and nuts—decimal equivalent of an inch. All sorts of machine shop figuring and 1001 other things, any one of which ought to be worth more than the price of this book to you, as it saves you the trouble of bothering the boss.

This is one of the most popular Mechanical books in print. It contains the greatest half a dollar's worth of information ever put between the two covers of a book. Treats on everything relating to Machine Shop figuring.

Digitized by Google

JUST PUBLISHED.

Prevention of Railroad Accidents

OR

Safety in Railroading

By GEORGE BRADSHAW

POCKET SIZE
192 PAGES

Price, 50c.

FULLY
ILLUSTRATED

A HEART-TO-HEART talk with Railroad Employes, dealing with facts, not theories, and showing the men in the ranks, from every-day experience, how accidents occur and how they may be avoided. The book is illustrated with seventy original photographs and drawings showing the safe and unsafe methods of work. No visionary schemes, no ideal pictures. Just plain facts and Practical Suggestions are given. Every railroad employe who reads the books is a better and safer man to have in railroad service. It gives just the information which will be the means of preventing many injuries and deaths.

The author of this work is employed by the N. Y. C. & H. R. R. R. in special service for the prevention of accidents. For many years he has been constantly engaged in the study of railroad accidents, and from the mass of facts, obtained by years of study, he has formed certain conclusions as to the prevention of accidents.

One of these conclusions is that the majority of preventable accidents are due, not to defective material or improper method, but to the men themselves. While considerations of safety still call for much improvement in physical conditions, it is a fact that in no field of activity has there been greater material advancement than in railroading. Yet the record of injury to employes has been growing worse every year.

This work takes up the human element in a heart-to-heart talk with employes. It show them (1) the seriousness of the personal injury problem and that they are the real sufferers from present conditions; and (2) how they themselves are responsible for the personal injury record and how they can improve it.

All Railroad Employes should procure a copy, read it, and do their part in preventing accidents.

Digitized by Google

THE APPLICATION OF HIGHLY

SUPERHEATED STEAM TO LOCOMOTIVES

By ROBERT GARBE

Edited by LESLIE S. ROBERTSON

Very fully Illustrated with Folding Plates and Tables

PRICE, $2.50

A PRACTICAL work specially prepared for the use of all interested in the application of superheated steam to locomotives, written by a man who probably has had greater experience and is more thoroughly familar, in a practical way, with superheated steam in locomotive practice than any other man on either contient. While the book deals with highly superheated steam, the matter of low superheat is thoroughly discussed. In addition to the theoretical discussion of the subject the book also contains full illustrated descriptions, with a discussion of the merits, of all the better known superheaters in the world. The details of the locomotive, outside of the superheater, for satisfactorily using steam at this high temperature are discussed and the designs introduced by Herr Garbe are illustrated. Reports on a number of very complete and practical tests form the concluding chapter of the work. This book cannot be recommended too highly to those motive power men who are anxious to maintain the highest efficiency in their locomotives.

CONTAINS CHAPTERS ON

I.—GENERATION OF HIGHLY SUPERHEATED STEAM.
II.—SUPERHEATED STEAM AND THE TWO-CYLINDER SIMPLE ENGINE.
III.—COMPOUNDING AND SUPERHEATING.
IV.—DESIGNS OF LOCOMOTIVE SUPERHEATERS.
V.—DESIGNS OF LOCOMOTIVE SUPERHEATERS.-cont'd
VI.—CONSTRUCTIVE DETAILS OF LOCOMOTIVES USING HIGHLY SUPERHEATED STEAM.
VII.—EXPERIMENTAL AND WORKING RESULTS WITH SUPERHEATED STEAM LOCOMOTIVES.

Digitized by Google

AMERICAN COMPOUND LOCOMOTIVES

By FRED H. COLVIN

142 Pages **PRICE, $1.00** **Fully Illustrated**

A BOOK showing every type and make of Compound Locomotives in use in the country. Tells in plain English—How to Handle Them. How to Repair Them. What to do if They Break Down. How to Disconnect Them. How to Set Valves. How to Test for Leaks and Locate Blows. All about Piston Valves. Reducing Valves. Valve Motion. Lubricating, etc.

CONTAINS CHAPTERS AS FOLLOWS:

A Bit of History. Theory of Compounding Steam Cylinders. Baldwin Two-Cylinder Compound. Pittsburg Two-Cylinder Compound. Rhode Island Compound. Richmond Compound. Rogers Compound. Schenectady Two-Cylinder Compound. Vauclain Compound. Tandem Compounds. Baldwin Tandem. The Colvin-Wightman Tandem. Schenectady Tandem. Balanced Locomotives. Baldwin Balanced Compound. Plans for Balancing. Locating Blows. Breakdowns. Reducing Valves. Drifting. Valve Motion. Disconnecting. Power of Compound Locomotives. Practical Notes.

CHARTS

TRACTIVE POWER CHART

A chart whereby you can find the tractive power or drawbar pull of any locomotive, without making a figure. Shows what cylinders are equal, how driving wheels and steam pressure affect the power. What sized engine you need to exert a given drawbar pull or anything you desire in this line. Price, 50c.

PASSENGER CAR CHART

A chart showing the anatomy of a passenger car, having every part of the car numbered and its proper name given in a reference list. Price, 20c.

BOX CAR CHART

A chart showing the anatomy of a box car, having every part of the car numbered and its proper name given in a reference list. Price, 20c.

GONDOLA CAR CHART

A chart showing the anatomy of a gondola car, having every part of the car numbered and its proper reference name given in a reference list. Price, 20c.

Digitized by Google

Digitized by Google

Digitized by Google

Digitized by Google

Digitized by Google

Digitized by Google

UNIVERSITY OF CALIFORNIA LIBRARY,
BERKELEY

THIS BOOK IS DUE ON THE LAST DATE
STAMPED BELOW

Books not returned on time are subject to a fine of 50c per volume after the third day overdue, increasing to $1.00 per volume after the sixth day. Books not in demand may be renewed if application is made before expiration of loan period.

MAR 27 1923

MAR 22 1924

20m-1,'22

Digitized by Google